Knowledge-Based Systems 315 (2025) 113238

Contents lists available at ScienceDirect

Knowledge-Based Systems

journal homepage: www.elsevier.com/locate/knosys

Multi-modal supervised domain adaptation with a multi-level alignment strategy and consistent decision boundaries for cross-subject emotion recognition from EEG and eye movement signals

Magdiel Jiménez-Guarneros *, Gibran Fuentes-Pineda

Department of Computer Science, Instituto de Investigaciones en Matemáticas Aplicadas y en Sistemas, Universidad Nacional Autónoma de México, Circuito Escolar s/n, Ciudad Universitaria, Coyoacán, Ciudad de México, 04510, Mexico

ARTICLE INFO

Keywords:
Multi-modal supervised domain adaptation
Deep learning
Multi-modal emotion recognition
Electroencephalogram
Eye tracking

ABSTRACT

Multi-modal emotion recognition systems from Electroencephalogram (EEG) and eye tracking signals have overcome the limitation of incomplete information expressed by a single modality, leveraging the complementarity of multiple modal information. However, the applicability of these systems is still restricted to new users since signal patterns vary across subjects, decreasing the recognition performance. In this sense, supervised domain adaptation has emerged as an effective method to solve such problem by reducing distribution differences between multi-modal signals from known subjects and a new one. Nevertheless, existing works exhibit a sub-optimal feature distribution alignment, avoiding a correct knowledge transfer. Likewise, although multi-modal approaches present robustness by learning a shared latent space, EEG data are still exposed to noise and perturbations, producing misclassifications in sensitive decision boundaries. To solve these issues, we introduced a multi-modal supervised domain adaptation method, named Multi-level Alignment and Consistent Decision Boundaries (MACDB), which introduces a three-fold strategy for multi-level feature alignment comprising modality-specific normalization, angular cosine distance, and Joint Maximum Mean Discrepancy to achieve (1) an alignment per modality, (2) an alignment between modalities, and (3) an alignment across domains. Also, robust decision boundaries are encouraged over the EEG feature space by ensuring consistent predictions with respect to adversarial perturbations on EEG data. We evaluated our proposal on three public datasets, SEED, SEED-IV and SEED-V, employing leave-one-subject-out cross-validation. Experiments showed that the effectiveness of our proposal achieves an average accuracy of 86.68%, 85.03%, and 86.48% on SEED, SEED-IV, and SEED-V across the three available sessions, outperforming the state-of-the-art results.

1. Introduction

Human emotions play an important role in many aspects of life and can influence our judgment and decision-making [1]. For example, experiencing emotions through marketing can bias preferences, while it can help generate interest and engagement in education. In this sense, human–computer interaction (HCI) systems have a broad potential application, since they would allow reacting appropriately to emotions to provide personal services for human beings [2,3]. In order to achieve this, a precise recognition of the human emotional state takes on great relevance, as a harmonious communication mechanism must be provided in human–computer interactions to interpretate emotions [4, 5].

In literature, emotion recognition has been studied for two types of signals: external behaviors and internal physiological responses. The former includes facial expression, speech, and eye movement signals [6], while the latter encompasses Electroencephalography (EEG), Electrocardiogram (ECG), respiration, and pulse [7]. Given that emotions are related to the regions and neural activity of the human brain, several studies have reported the development of emotion recognition systems from EEG signals. However, emotions are complex psycho-physiological processes, which makes them difficult to describe by using single-modal signals [7,8]. EEG can be affected by external obstacles, noise, or device instability, so reliable emotion recognition cannot be guaranteed [9]. To address these limitations, multi-modal emotion recognition (MER) has shown to be a feasible solution [10–14], given that data complementarity and robustness to sensor device failures are identified as its main advantages. In this sense, recent studies have shown that combining EEG and eye movement signals is a reliable

* Corresponding author.
E-mail address: mjmnzg@gmail.com (M. Jiménez-Guarneros).

https://doi.org/10.1016/j.knosys.2025.113238
Received 8 September 2023; Received in revised form 22 September 2024; Accepted 21 February 2025
Available online 14 March 2025
0950-7051/© 2025 Elsevier B.V. All rights are reserved, including those for text and data mining, AI training, and similar technologies.

approach [10,15–17], as internal physiological responses and external subconscious behaviors can be leveraged to produce a superior emotion recognition performance.

Existing works for MER are mainly based on multi-modal fusion, which aims to leverage individual and complementary information from multiple sources [18]. In this sense, different bimodal neural network architectures have been reported in [7–9,16,17] to learn a shared feature space between EEG and eye movement signals. Some works [8,9] also incorporate correlation analysis to learn correlated features from multi-modal signals. Likewise, works reported in [8,16] introduced fusion strategies based on attention mechanisms to focus on most of the relevant multi-modal signals, as they do not contribute equally. Recently, a more complex network [17] also incorporated time and spatial information through attention-based models to improve the fusion results. However, the presented works rely on collecting a significant number of labeled samples to train a classifier per subject. This issue limits the applicability of conventional multi-modal classifiers when applied to new users, as there is variability between physiological signals from different subjects [19,20]. Indeed, a change in data distribution between subjects is perceived through differences in signal patterns [21]. Although this problem can be solved by collecting recalibration data of a new user, it is prohibitively time-consuming, hindering the application of multi-modal emotion recognition models in practice [22].

To address the problem mentioned above, supervised domain adaptation (SDA) emerges as a solution by transferring previously collected data from known subjects to a new one, so that an effective classifier can be built over this subject. For this, SDA reduces the distribution discrepancies between labeled data from a source domain (known subjects) and limited labeled data from a target domain (new subject) in a shared feature space. In literature, most SDA solutions have proposed for single-modal approaches from EEG signals [23–27]. Some relevant methods as in [23,28] focus on reducing the divergence of marginal and conditional distributions between known subjects and the new one. Meanwhile, reported works referenced in [24,27] first select the most similar known subjects with respect to the new one, followed by the reduction of marginal distributions between subjects. Indeed, these methods arise as solutions as they can be extended to a multi-modal approach by concatenating features from different modalities and directly applying single-modal approaches [20]. However, sub-effective classifiers can be built on new subjects, as single-modal methods do not explicitly exploit statistical relationships between EEG and eye movement signals during the distribution alignment between source and target domains. Recently, a group of works in [29–32] introduced multi-modal neural network architectures on EEG and eye movement signals from multiple subjects to build generic classifiers. The main approach of these works consists in exploiting the complementarity between modalities through correlation analysis and multi-modal fusion based on attention mechanisms. Likewise, multi-modal network architectures in [31,32] have exploited spatial EEG features in order to improve the fusion results. Unfortunately, part of the success of these multi-modal networks depends on first aligning subject distributions by normalizing data from known subjects and a new one in a preprocessing step. Note that data statistics from a new subject can be only obtained under the assumption of domain adaptation, as a generic approach does not have access to information from new users in real scenarios. Although these works represent baseline multi-modal solutions to learn from multiple subjects, an explicit distribution alignment between source and target domains is not performed by the neural network model over the shared feature space. In this direction, multi-modal SDA has been reported to exploit complementarity and cooperative capabilities, while a domain distribution alignment is carried out. Indeed, Wang et al. [20] proposed multi-modal reconstruction and domain distribution alignment, which initially extract cross-modal information from multiple modalities with a variational autoencoder by projecting them into a common latent feature space. At the same time, adversarial learning and cycle-consistency regularization are imposed to reduce differences between source and target domains over the latent feature spaces learned by the variational autoencoder. Despite this progress, it is observed that adaptive classifiers for new subjects are sub-effective, as alignments are mainly performed over latent features from fused modalities. Specifically, the existing multi-modal SDA method assumes that latent features produced by specific hidden network layers are implicit aligned. However, such layers process different levels of data abstraction that require better statistical alignments to produce more similar distributions between domains. Moreover, despite the fact that multi-modal fusion aims to offer robustness to sensor failures, existing works do not consider that input EEG signals are still exposed to noise and perturbations as they are highly non-stationary, producing sensitive and non-discriminative decision boundaries. Therefore, a solution that addresses the previously mentioned issues must be developed to ensure a correct knowledge transfer between subjects, so that effective adaptive classifiers can be built for new subjects.

In this paper, we propose a multi-modal supervised domain adaptation method for cross-subject emotion recognition from EEG and eye movement signals. Our proposal, named Multi-level Alignment and Consistent Decision Boundaries (MACDB), is designed to address inter-subject variability by following two assumptions: (1) distribution alignments must also be performed at specific network layers that process different levels of data abstractions, and (2) consistent decision boundaries must be encouraged to face input EEG perturbations. By following such assumptions, MACDB aims to produce more similar distributions between source and target domains, as well as discriminative and robust decision boundaries, in order to build effective adaptive classifiers for new users. For this, our proposal introduces a three-fold strategy for multi-level feature alignment representing different layers of data abstractions within a bimodal neural network: (1) alignment per specific modality, (2) alignment between modalities, and (3) alignment across domains over the feature space of the fused modalities. Firstly, MACDB ensures that learned features in each modality maintain the same statistics at zero mean and unit variance, introducing batch normalization (BN) layers [33] into specific modality sub-networks. Secondly, our proposal introduces the use of angular cosine distance [34] to enforce similar cosines, as statistical relationships are not exploited between EEG and eye movement features in previous levels. Thirdly, MACDB carries out a standard distribution alignment between source and target domains, imposing Joint Maximum Mean Discrepancy (JMMD) [35] over fused multi-modal features from source and target domains. In addition, to face input EEG perturbations, adversarial disturbances [36] are first applied on EEG signals from a new subject. Then, consistent predictions are promoted between original and perturbed EEG signals via Kullback–Leibler (KL) divergence [36,37] to produce robust decision boundaries and avoid misclassifications of emotional states. The proposed method was incorporated into a bimodal deep feedforward network, which addresses the multi-modal emotion recognition task. MACDB was evaluated on three public benchmarks, SEED, SEED-IV and SEED-V by using a cross-subject emotion recognition approach, *i.e.*, in each benchmark, one subject is used as target domain while the remaining subjects forms the source domain; this procedure is repeated for each subject until all of them have been employed as the target domain. In our experiments, two settings were considered, as recalibration data from new users are usually assumed to have a similar distribution to data from the test set. However, this assumption is not valid in real applications as mean and variance from the test dataset are not available during testing.

The contributions of this paper are:

- We present a multi-modal supervised domain adaptation method, named MACDB, for emotion recognition from EEG and eye movement signals. Our proposal comprises a three-fold strategy for multi-level distribution alignment and a strategy to encourage consistent decision boundaries, producing similar feature distributions between subjects with robust decision boundaries.

- Our proposal was evaluated on three public datasets, SEED, SEED-IV and SEED-V. The experimental results show that MACDB achieves the highest average accuracy across the three available sessions in each dataset. Furthermore, our proposal surpasses the state-of-the-art results for the three datasets.
- The MACDB method maintains the best performance even, when testing data are not assumed to have a similar distribution to data from the target domain. Likewise, our proposal presents similar or even better performance when a reduced set of samples per class is employed for recalibration.

2. Related work

This section presents the related work in multi-modal supervised domain adaptation for emotion recognition from EEG and eye movement signals. To facilitate easy reference, Table 1 provides a taxonomy that offers a comprehensive overview emphasizing differences between existing studies and our proposal.

Single-modal supervised domain adaptation. Supervised domain adaptation has usually been studied for cross-subject emotion recognition from EEG signals. Existing works employ a small amount of labeled EEG data from new users to build an effective model without delay. Before deep learning, a shallow approach was proposed in [38], which first trains a classifier on each source subject to select those that provide the highest accuracy on a new subject. Then, Style Transfer Mapping aligns marginal distributions between selected known subjects and the new one. Regarding deep learning approaches, Wang et al. [23] proposed domain adaptation SPD matrix network (daSPDnet), which combines prototype learning with the Riemannian metric to calculate the geometric mean in the low-dimensional layer of the neural network. The daSPDnet method reduces the marginal distributions between subjects at the feature level, while conditional distributions are matched at the sample level. Authors in [24] introduced the Few-label Adversarial Domain Adaption (FLADA) method, which first obtains the top-K similar known subjects in relation to the new one. Subsequently, three models are trained on six data groups for each selected subject and the new one, while multiple classifiers determine the final emotion. Tang et al. [25] used meta-transfer learning to fine-tune a pre-trained neural network model only employing a small labeled dataset from a new subject; data from known subjects are not required during the fine-tuning process. Bi et al. [26] introduced a multi-domain information input graph convolution neural network (MdGCNN), which incorporates topology information from EEG channels to learn high-level features. At the same time, MdGCNN uses Maximum Mean Discrepancy to minimize the distance between learned features from the known subjects and new ones. Chen et al. [27] first introduced similarity constraint style transfer mapping (SCSTM) to maintain the local structure for the new subject. Subsequently, the authors proposed a domain selection strategy with geodesic flow kernel (DSSWGFK) to identify the most similar known subjects and assign a weight to each one. Zhang et al. [28] presented self-training maximum classifier discrepancy (SMCD) to maximize the discrepancies between two classifier outputs to discriminate decision boundaries for each category. In addition, SMCD uses soft labels to refine useful information from known subjects. Indeed, single-modal methods offer a solution since they can be applied to a multi-modal approach by concatenating features from different modalities in a single feature vector, as reported in [20]. However, single-modal methods perform a sub-optimal knowledge transfer between subjects, as an explicit correlation of multiple modalities is not exploited in the process of distribution alignment between source and target domains. Specifically, multi-modal fusion and modality alignment strategies are not considered to leverage the complementarity between EEG and eye movement signals.

Multi-modal neural networks. Researchers investigated different approaches based on multi-modal neural networks to exploit the complementary information from EEG and eye movement signals in cross-subject emotion recognition. Liu et al. [29] studied the performance of deep canonical correlation analysis with attention mechanism (DCCA-AM) to learn correlated features between modalities from subjects belonging to different cultures. The DCCA-AM method uses two sub-networks to learn specific features for each modality. Then, DCCA-AM introduces an attention-based fusion module to fuse specific features, while correlation loss is imposed to learn correlated features. Gong et al. [30] presented Coordinated-representation Decision Fusion Network (CoDF-Net) by leveraging DCCA-AM, where emotional states are categorized through an assembly solution, named Decision-level Fusion Broad Learning System. Authors in [31] proposed a multiple stacked broad learning system (MSBLS), which fuses eye movement features with activations of common brain regions across subjects, using residual values via dynamic stacking. More recently, Tang et al. [32] introduced a hierarchical multimodal network for robust heterogeneous physiological representations (RHPRNet), which employs a hierarchical fusion module to combine modality-specific features learned from EEG and eye movement signals. Then, RHPRNet incorporates a scenario-adaptive stage and contrastive alignment to reduce the variability between known subjects. Zhu et al. [39] introduced the multi-dimensional homogeneous encoding spatial alignment (MHESA) method, which first performs a multi-modal joint learning to learn a common projection space between EEG and eye movement signals. Subsequently, a knowledge transfer module learns the spatial distribution from eye movement features while retaining the original EEG features. Li et al. [40] proposed the Radial Basis Deformable Residual Convolutional Network model embedded with Local Multi-modal Feature Knowledge (RBDRCNN-LMFK), which exploits a discriminative representation from EEG signals via RBDRCNN, while LMFK aims to effectively combine of multi-modal signals. Indeed, reported multi-modal neural networks aim to build a generic classifier based on multi-modal labeled data from known subjects. In real scenarios, a generic approach cannot access information from new users during training. However, the reported works perform data normalization in a preprocessing step, aligning data distribution from a new subject concerning those of known subjects. This preprocessing is only allowed under domain adaptation assumption but not for domain generalization. Despite this, the reported multi-modal network works serve us as a reference for our experiments. It should be noted that relationships are learned between modalities by multi-modal neural networks in latent feature space. However, an explicit distribution alignment between source and target domains with a separable feature space is not achieved by the neural networks.

Multi-modal supervised domain adaptation. These methods perform explicit multi-modal fusion and domain distribution alignment during model training. Wang et al. [20] investigated several techniques and methods that could be useful to address the previously mentioned problems. This research showed that the most relevant work was the dynamic adversarial adaptation network (DAAN), which performs feature and prediction alignments [41]. Despite this, existing methods exhibited sub-optimal alignments between subject distributions from EEG and eye movement signals. In this context, the authors proposed a multi-modal domain adaptive variational autoencoder (MMDA-VAE), which learns a shared feature space from multiple modalities by employing dedicated variational autoencoder (VAE) network to extract cross-modal information via reconstruction regularizer. Subsequently, MMDA-VAE uses adversarial learning and cycle-consistency mapping to reduce the distribution difference between subjects. Even though MMDA-VAE considers the domain distribution alignments of several modalities, such alignments are mainly performed over the global feature space of fused modalities, producing sub-optimal distribution similarities between subjects. Specifically, MMDA-VAE assumes that latent features produced by specific hidden network layers are implicitly aligned, but such layers process different levels of data abstraction that require a better statistical alignment. Moreover, it is assumed that multi-modal fusion strategy has shown to build classifiers that are more robust to sensor failures. However, existing works do not consider that

Table 1
Existing multi-modal supervised domain adaptation works to address the cross-subject emotion recognition from EEG and eye movement signals. Single-modal supervised domain adaptation methods on EEG signals are also included as they can be extended to multi-modal approach. Similarly, multi-modal neural networks were included as baseline.

Methods	Modality fusion strategy	Modality alignment	Feature distribution alignment between source and target domains	Inter-class separation on the target domain	Dataset
Single-modal supervised domain adaptation on EEG signals					
MdGCNN [26]	N/A	N/A	Maximum Mean Discrepancy between EEG spatial features	N/A	SEED
FLADA [24]	N/A	N/A	Adversarial learning between the most related source domains	N/A	SEED
SCSTM [27]	N/A	N/A	Similarity constraint style transfer mapping	N/A	SEED, SEED-IV
SMCD [28]	N/A	N/A	N/A	Prediction alignment via maximum classifier discrepancy	SEED, SEED-IV
Multi-modal neural networks from EEG and eye movement signals					
DCCA [29]	Sum fusion and attention mechanism	Canonical correlation	N/A	N/A	SEED, SEED-IV
CoDF-Net [30]	Decision-level fusion broad learning system	Canonical correlation	N/A	N/A	SEED
MSBLS [31]	Stacked broad learning system	N/A	N/A	N/A	SEED
RHPRNet [32]	Hierarchical fusion module	N/A	Scenario-adaptive stage and contrastive alignment only applied for source domain	N/A	SEED-IV, SEED-V
MHESA [39]	Multimodal joint space encoder	Knowledge transfer via Kullback–Leibler divergence and Wasserstein distance	N/A	N/A	SEED-IV
RBDRCNN-LMFK [40]	Local multi-modal feature knowledge		N/A	N/A	SEED-IV
Multi-modal supervised domain adaptation from EEG and eye movement signals					
DAAN [20,41]	Feature concatenation	N/A	Feature distribution alignment via Dynamic adversarial adaptation network	Prediction distribution alignment via Dynamic adversarial adaptation network	SEED, SEED-IV
MMDA-VAE [20]	Reconstruction regularizer (VAE)		Adversarial learning and Cycle consistency	N/A	SEED, SEED-IV
MACDB (Ours)	Sum fusion	Angular cosine distance	(1) Modality-specific normalization and (2) Joint Maximum Mean Discrepancy for domain distribution alignment	Consistent boundaries via adversarial perturbations on EEG signals	SEED, SEED-IV, SEED-V

input EEG signals are still exposed to noise and perturbations as they are highly non-stationary, generating sensitive and non-discriminative decision boundaries. We introduce a multi-modal supervised domain adaptation solution that addresses the limitations of existing works, presented in Table 1.

3. Proposed method

Let $\mathcal{S} = (\mathbf{X}_1^s, \mathbf{X}_2^s, \mathbf{Y}^s) = \{(\mathbf{x}_{1,i}^s, \mathbf{x}_{2,i}^s, \mathbf{y}_i^s)\}_{i=1}^{n_s}$ be the source domain with n_s labeled samples, where $(\mathbf{x}_{1,i}^s, \mathbf{x}_{2,i}^s)$ is the ith modal sample from EEG and eye movement with its class label $\mathbf{y}_i^s$. Similarly, let $\mathcal{T} = (\mathbf{X}_1^t, \mathbf{X}_2^t, \mathbf{Y}^t) = \{(\mathbf{x}_{1,i}^t, \mathbf{x}_{2,i}^t, \mathbf{y}_i^t)\}_{i=1}^{n_t}$ a target domain with a limited number of samples n_t. $\mathcal{S}$ and $\mathcal{T}$ are drawn from distributions $P_s(\mathbf{X}_1^s, \mathbf{X}_2^s, \mathbf{Y}^s)$ and $P_t(\mathbf{X}_1^t, \mathbf{X}_2^t, \mathbf{Y}^t)$, defined over $\mathcal{X}_1, \mathcal{X}_2 \times \mathcal{Y}$, where $\mathcal{X}_1, \mathcal{X}_2$ are the input variable spaces and $\mathcal{Y}$ is the label space. Furthermore, a difference between domain distributions is assumed, *i.e.* $P_s(\mathbf{X}_1^s, \mathbf{X}_2^s, \mathbf{Y}^s) \neq P_t(\mathbf{X}_1^t, \mathbf{X}_2^t, \mathbf{Y}^t)$. Given $\mathcal{S}$ and $\mathcal{T}$, the aim of multi-modal supervised domain adaptation is to build a function $G : \mathbf{X}_1, \mathbf{X}_2 \rightarrow \mathbf{Y}$ to correctly predict labels on target domain, such that G learns a latent feature space $\mathcal{Z}$ where $P_s(\mathbf{X}_1^s, \mathbf{X}_2^s, \mathbf{Y}^s) \approx P_t(\mathbf{X}_1^t, \mathbf{X}_2^t, \mathbf{Y}^t)$. The function G can be written as a composition of two functions, $G_f \circ G_h$, representing the feature extractor and labeling functions, such that $G_f : \mathbf{X}_1, \mathbf{X}_2 \rightarrow \mathbf{Z}$ and $G_h : \mathbf{Z} \rightarrow \mathbf{Y}$. In supervised domain adaptation based on deep learning, G represents a neural network with trainable parameters Θ. Likewise, G_f and G_h represent the feature extractor and feature labeling subnetworks with their respective trainable parameters θ and ω, where $\Theta = \{\theta, \omega\}$. Indeed, G_f produces a latent feature representation $\mathbf{Z}^s$ from multi-modal source data $\mathbf{X}_1^s$ and $\mathbf{X}_2^s$, that is, $\mathbf{Z}^s = G_f(\mathbf{X}_1^s, \mathbf{X}_2^s)$. Similarly, a latent feature representation $\mathbf{Z}^t$ is obtained from multi-modal target data by using $\mathbf{Z}^t = G_f(\mathbf{X}_1^t, \mathbf{X}_2^t)$. Subsequently, $\mathbf{Z}^s$ and $\mathbf{Z}^t$ are processed by the labeling function G_h to produce the source and target predictions, $\hat{\mathbf{Y}}^s = G_h(\mathbf{Z}^s)$ and $\hat{\mathbf{Y}}^t = G_h(\mathbf{Z}^t)$. Then, given $\mathcal{S}$ and $\mathcal{T}$, the multi-modal supervised domain adaptation adjusts the network parameters Θ of G to learn a latent feature representation between $\mathbf{Z}^s$ and $\mathbf{Z}^t$, such that $P_s(\mathbf{Z}^s) \approx P_t(\mathbf{Z}^t)$.

As mentioned, multi-modal supervised domain adaptation aims to train a neural network in order to learn a shared feature space between domains, so that an effective adaptive classifier can be learned on new subjects. For this, state-of-the-art methods focused on aligning the global feature space between domains, assuming that different levels of data abstractions are also implicitly aligned. However, specific hidden layers require better statistical alignments as they process these levels of data abstraction, which could help produce more similar distributions between source and target domains. Moreover, multi-modal fusion has demonstrated robustness to noise and sensor failures. Unfortunately, existing methods do not consider that EEG signals are still exposed to perturbations that could produce sensitive decision boundaries. Thus, MACDB trains a bimodal deep neural network to produce similar statistics at different output levels of the hidden network layers, considering specific levels of data abstractions. For this, a three-fold strategy for multi-level alignment is introduced to perform (1) an alignment within each modality, (2) an alignment between modalities, and (3) an alignment across domains over the feature space of fused modalities. In addition, our proposal ensures to produce consistent predictions on EEG data from a new subject, encouraging the bimodal

neural network to learn discriminative and robust decision boundaries over the shared feature space between domains.

Fig. 1 presents the MACDB framework, which considers the overall architecture and training process. We detail the specific modules and loss functions to train a bimodal neural network that learns a latent feature space between domains with similar distributions and robust decision boundaries. First, multi-modal data from multiple known subjects are merged into a single dataset $(\mathbf{X}_1^s, \mathbf{X}_2^s, \mathbf{Y}^s)$ to form the source domain $\mathcal{S}$. Likewise, multi-modal data from a new subject $(\mathbf{X}_1^t, \mathbf{X}_2^t, \mathbf{Y}^t)$ are used to form the target domain $\mathcal{T}$. Subsequently, preprocessing and feature extraction methods are applied to EEG and eye movement data to produce a first feature space. Source and target multi-modal data are processed by $G = G_f \circ G_h$ in a separated way, but adjusting the same network parameters Θ, as they are shared across domains. The feature extractor G_f is composed of two modality subnetworks, G_f^1 and G_f^2, as well as a multi-modal fusion module f, *i.e.*, $G_f(\mathbf{X}_1^D, \mathbf{X}_2^D) = f(G_f^1(\mathbf{X}_1^D), G_f^2(\mathbf{X}_2^D))$ for any domain $\mathcal{D} = \{s, t\}$. Note that G_f^1 and G_f^2 adjust trainable parameters θ_1 and θ_2, using multi-modal information from (1) EEG and (2) eye movement signals, respectively. Then, the latent feature representations $\mathbf{Z}_1^s = G_f^1(\mathbf{X}_1^s)$ and $\mathbf{Z}_2^s = G_f^2(\mathbf{X}_2^s)$ are produced for both modalities from the source domain, while the latent feature representations $\mathbf{Z}_1^t = G_f^1(\mathbf{X}_1^t)$ and $\mathbf{Z}_2^t = G_f^2(\mathbf{X}_2^t)$ are obtained for every modality from the target domain. As mentioned above, our proposal performs a multi-level feature alignment following three strategies: per modality, between modalities, and among domains. In a first level, batch normalization (BN) layers [33] are introduced per modality subnetwork to maintain statistics of learned features at zero mean and unit variance across the different modalities. However, due to BN layers are unable to exploit statistical relationships between modalities, in a second level, we enforce similar cosine statistics between modality features $\mathbf{Z}_1^D$ and $\mathbf{Z}_2^D$ for each domain $\mathcal{D}$, using the modality alignment loss $\mathcal{L}_{mod}$ via angular cosine distance [34]. Indeed, a multi-modal fusion module f based on a weighted sum [8] is applied to leverage complementarity between modality features. From this, global feature spaces $\mathbf{Z}^s$ and $\mathbf{Z}^t$ are obtained for source and target domains by applying a fusion module f, that is, $\mathbf{Z}^s = f(\mathbf{Z}_1^s, \mathbf{Z}_2^s) = f(G_f^1(\mathbf{X}_1^s), G_f^2(\mathbf{X}_2^s))$ and $\mathbf{Z}^t = f(\mathbf{Z}_1^t, \mathbf{Z}_2^t) = f(G_f^1(\mathbf{X}_1^t), G_f^2(\mathbf{X}_2^t))$. In a third level, our proposal reduces divergence between the mean embeddings of two domain distributions by imposing distribution alignment loss $\mathcal{L}_{align}$ through Joint Maximum Mean Discrepancy (JMMD) [35]. By performing this multi-level alignment strategy, MACDB aims to learn a latent feature space between known subjects and a new subject with similar distributions. However, this strategy does not ensure correct predictions on target domain, as noise and perturbations on EEG data from a new subject can produce sensitive and non-discriminative decision boundaries. To address this issue, EEG features from the target domain are first disturbed $\tilde{\mathbf{X}}_1^t$ via adversarial perturbations [36] and then processed by the multi-modal neural network to produce their respective predictions $\hat{\mathbf{Y}}_p^t$. Then, consistency is promoted between the original target predictions $\hat{\mathbf{Y}}^t = G_h(G_f(\mathbf{X}_1^t, \mathbf{X}_2^t))$ and the perturbed target predictions $\hat{\mathbf{Y}}_p^t = G_h(G_f(\tilde{\mathbf{X}}_1^t, \mathbf{X}_2^t))$ using consistent loss $\mathcal{L}_{con}$ via Kullback–Leibler divergence [37]. By doing this, MACDB aims to produce discriminative and robust decision boundaries while similar distributions are learned between subjects, encouraging a correct knowledge transfer.

The total loss to train G is described as follows

$$\begin{aligned}\mathcal{L}(\mathbf{X}_1^s, \mathbf{X}_2^s, \mathbf{Y}^s, \mathbf{X}_1^t, \mathbf{X}_2^t, \mathbf{Y}^t, G; \theta, \omega) = \mathcal{L}_{cls}(\mathbf{X}_1^s, \mathbf{X}_2^s, \mathbf{Y}^s, \mathbf{X}_1^t, \mathbf{X}_2^t, \mathbf{Y}^t, G; \theta, \omega)\\ +\lambda_m \cdot [\mathcal{L}_{mod}(\mathbf{X}_1^s, \mathbf{X}_2^s, G_f^1, G_f^2; \theta_1, \theta_2) + \mathcal{L}_{mod}(\mathbf{X}_1^t, \mathbf{X}_2^t, G_f^1, G_f^2; \theta_1, \theta_2)]\\ +\lambda_d \cdot \mathcal{L}_{align}(\mathbf{X}_1^s, \mathbf{X}_2^s, \mathbf{X}_1^t, \mathbf{X}_2^t, G_f; \theta)\\ +\lambda_v \cdot \mathcal{L}_{con}(\mathbf{X}_1^t, \mathbf{X}_2^t, G; \theta, \omega),\end{aligned} \tag{1}$$

where λ_m, λ_d and λ_v are trade-off hyperparameters. Note that $\mathcal{L}_{cls}$ is the cross-entropy loss, which is the standard function loss for classification tasks

$$\begin{aligned}\mathcal{L}_{cls}(\mathbf{X}_1^s, \mathbf{X}_2^s, \mathbf{Y}^s, \mathbf{X}_1^t, \mathbf{X}_2^t, \mathbf{Y}^t, G; \theta, \omega) =\\ -\mathbb{E}_{\mathbf{x}_1, \mathbf{x}_2, y \sim (\mathbf{X}_1, \mathbf{X}_2, \mathbf{Y})} \sum_{c=1}^{C} \mathbf{1}_{(c=y)} \log G(\mathbf{x}_1, \mathbf{x}_2),\end{aligned} \tag{2}$$

where C is the number of classes and $(\mathbf{X}_1, \mathbf{X}_2, \mathbf{Y}) = (\mathbf{X}_1^s, \mathbf{X}_2^s, \mathbf{Y}^s) \cup (\mathbf{X}_1^t, \mathbf{X}_2^t, \mathbf{Y}^t)$. Labeled samples $\mathbf{x}_1$ and $\mathbf{x}_2$ from the source $\mathcal{S}$ and target $\mathcal{T}$ domains are used by $\mathcal{L}_{cls}$ to produce a discriminative feature space.

In the following sections, we describe the details of our strategies for multi-level alignment and consistent decision boundaries. Subsequently, the training algorithm and a complexity analysis are introduced.

3.1. Multi-level distribution alignment

Statistic alignment per modality. At the first level, MACDB ensures that learned features of each modality maintain statistics at zero mean and unit variance, while source and target data are processed by the multi-modal neural network G. For this, Batch Normalization (BN) layers [33] are introduced into modality subnetworks G_f^1 and G_f^2 to perform a modality-specific normalization of learned features. A BN layer standardizes each ith learned feature $z_{m,i}$ in layer ℓ for the modality $m = \{1, 2\}$ as follows

$$\hat{z}_{m,i}^{\ell} = \gamma_{m,i}^{\ell} \cdot \frac{(z_{m,i}^{\ell} - \mu_{m,i}^{\ell})}{\sigma_{m,i}^{\ell}} + \beta_{m,i}^{\ell}, \tag{3}$$

where $\mu_{m,i}$ and $\sigma_{m,i}$ are the mean and standard deviation of samples from the current mini-batch; $\gamma_{m,i}$ and $\beta_{m,i}$ are trainable parameters for scale and translation. Statistics $\mu_{m,i}$ and $\sigma_{m,i}$ are adjusted during model training.

Feature alignment between modalities. On a second level, we propose the usage of angular cosine distance [34] as regularizer to exploit statistical relationships between multi-modal features $\mathbf{Z}_1^D$ and $\mathbf{Z}_2^D$ for each domain $\mathcal{D} = \{s, t\}$. Note that modalities are first mapped to a specific feature space with the same dimensionality, and then, such modality feature spaces are fused by a weighted sum to form a shared feature space. Our proposal expect to improve the fusion results in this shared feature space by encouraging similar cosines in a previous level. Indeed, we selected this distance to compute more precise similarities between multi-modal features. The cosine similarity measures the similitude between two feature vectors based on their angle [42]. However, the problem of cosine similarity is that two nearly parallel feature vectors are difficult to distinguish as their angles obtain similar cosine values. Thus, angular cosine distance solves this problem by normalizing the angle with the inverse cosine [34] as follows

$$d_{ang}(\mathbf{z}_a, \mathbf{z}_b) = \arccos(d_{cos}(\mathbf{z}_a, \mathbf{z}_b))/\pi, \tag{4}$$

where $\arccos$ is the inverse cosine and π is the constant value of Pi; d_{cos} is the cosine similarity between feature vectors $\mathbf{z}_a$ and $\mathbf{z}_b$, defined as $d_{cos}(\mathbf{z}_a, \mathbf{z}_b) = \frac{\mathbf{z}_a \cdot \mathbf{z}_b}{\|\mathbf{z}_a\| \|\mathbf{z}_b\|}$. Then, the modality alignment loss for each domain $\mathcal{D}$ is defined as

$$\mathcal{L}_{mod}(\mathbf{X}_1^s, \mathbf{X}_2^s, G_f^1, G_f^2; \theta_1, \theta_2) = \mathbb{E}_{\mathbf{x}_1^s, \mathbf{x}_2^s \sim (\mathbf{X}_1^s, \mathbf{X}_2^s)} d_{ang}(G_f^1(\mathbf{x}_1^s), G_f^2(\mathbf{x}_2^s)), \tag{5}$$

$$\mathcal{L}_{mod}(\mathbf{X}_1^t, \mathbf{X}_2^t, G_f^1, G_f^2; \theta_1, \theta_2) = \mathbb{E}_{\mathbf{x}_1^t, \mathbf{x}_2^t \sim (\mathbf{X}_1^t, \mathbf{X}_2^t)} d_{ang}(G_f^1(\mathbf{x}_1^t), G_f^2(\mathbf{x}_2^t)), \tag{6}$$

where the outputs of $G_f^1(\mathbf{X}_1^s)$ and $G_f^2(\mathbf{X}_2^s)$ are the latent feature representations $\mathbf{Z}_1^s$ and $\mathbf{Z}_2^s$ from EEG and eye movement signals for the source domain. Similarly, $G_f^1(\mathbf{X}_1^t)$ and $G_f^2(\mathbf{X}_2^t)$ produce the latent feature representation for the target domain.

Distribution alignment between domains. On a third level, MACDB performs the standard distribution alignment between learned features $\mathbf{Z}^s$ and $\mathbf{Z}^t$ of the source and target domains. In our proposal, both domains are enforced to have similar distributions through Joint Maximum Mean Discrepancy (JMMD) [35]. Particularly, JMMD measures the Hilbert–Schmidt norm between the kernel mean embedding of data samples from source and target domains. For this, JMMD first compares the distance between embeddings per domain and then between embeddings from both domains. These embeddings are computed by using a kernel function $\kappa(\cdot, \cdot)$, which maps the learned features to a higher-dimensional space, allowing a better distribution alignment on

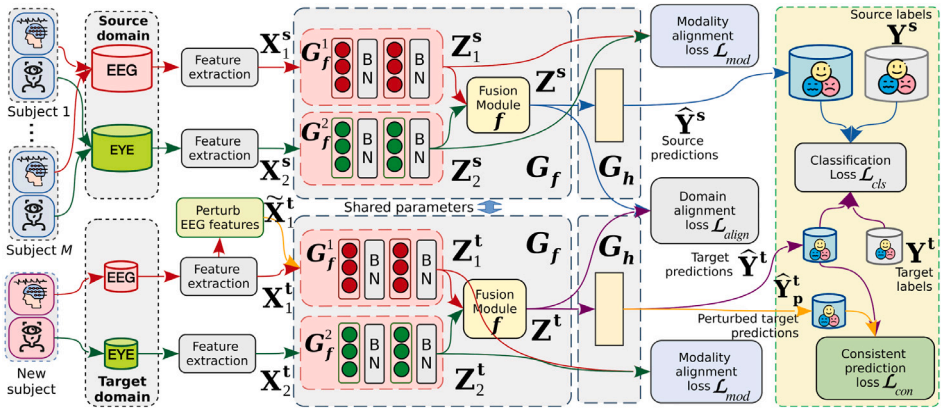

Fig. 1. Framework of the MACDB method.

this space. In practice, an estimate of JMMD maintains a quadratic complexity, which can be infeasible for scalable deep transfer learning. Thus, we use a linear-time estimate of JMMD [35] because it eliminates the bias caused by domain size. The distribution alignment loss based on JMMD is expressed as follows

$$\begin{aligned}\mathcal{L}_{align}(\mathbf{X}_1^s,\mathbf{X}_2^s,\mathbf{X}_1^t,\mathbf{X}_2^t,G_f;\theta) = \\ \tfrac{2}{n_b}\textstyle\sum_{i=1}^{n_b/2}\left(\prod_{\ell\in L}\kappa^{\ell}(\mathbf{z}_{2i-1}^{s_\ell},\mathbf{z}_{2i}^{s_\ell})+\prod_{\ell\in L}\kappa^{\ell}(\mathbf{z}_{2i-1}^{t_\ell},\mathbf{z}_{2i}^{t_\ell})\right) \\ -\tfrac{2}{n_b}\textstyle\sum_{i=1}^{n_b/2}\left(\prod_{\ell\in L}\kappa^{\ell}(\mathbf{z}_{2i-1}^{s_\ell},\mathbf{z}_{2i}^{t_\ell})+\prod_{\ell\in L}\kappa^{\ell}(\mathbf{z}_{2i-1}^{t_\ell},\mathbf{z}_{2i}^{s_\ell})\right),\end{aligned} \tag{7}$$

being $\{(\mathbf{z}_i^{s_1},\ldots,\mathbf{z}_i^{s_{|L|}})\}_{i=1}^{n_b}$ and $\{(\mathbf{z}_i^{t_1},\ldots,\mathbf{z}_i^{t_{|L|}})\}_{i=1}^{n_b}$ the n_b latent feature representations from the source and target domains for every neural network layer $\ell\in L$, that is, $\mathbf{z}_i^{s_\ell}\in\mathbf{Z}^{s_\ell}$ and $\mathbf{z}_i^{t_\ell}\in\mathbf{Z}^{t_\ell}$. However, for our implementation, JMMD is only used to align the outputs of the multimodal fusion layer f, defined as a weighted sum [8] of learned features of EEG and eye movement signals,

$$\mathbf{Z}^s = \alpha_1\cdot\mathbf{Z}_1^s+\alpha_2\cdot\mathbf{Z}_2^s, \tag{8}$$

$$\mathbf{Z}^t = \alpha_1\cdot\mathbf{Z}_1^t+\alpha_2\cdot\mathbf{Z}_2^t, \tag{9}$$

where latent modality features $\mathbf{Z}_1^s = G_f^1(\mathbf{X}_1^s)$ and $\mathbf{Z}_2^s = G_f^2(\mathbf{X}_2^s)$ are produced for the source domain, while $\mathbf{Z}_1^t = G_f^1(\mathbf{X}_1^t)$ and $\mathbf{Z}_2^t = G_f^2(\mathbf{X}_2^t)$ are drawn from the target domain; α_1 and α_2 are trade-off hyperparameters that determine the importance of each modality. Finally, $\kappa(\cdot,\cdot)$ is a linear combination of multiple radial basis function (RBF) kernels [43,44] between latent features $\mathbf{z}_a$ and $\mathbf{z}_b$

$$\kappa(\mathbf{z}_a,\mathbf{z}_b) = \sum_j \eta_j \exp\{-\frac{1}{2\sigma_j}\|\mathbf{z}_a-\mathbf{z}_b\|^2\}, \tag{10}$$

where σ_j is the standard deviation of the j-th RBF kernel and η_j its associated weight.

3.2. Consistent decision boundaries

Our proposal aims to promote robust decision boundaries by generating consistent target predictions between original and perturbed EEG data. For this, we used the adversarial perturbation scheme reported in [36] to produce a disruption of EEG features in the target domain. These perturbations are introduced exclusively to EEG data as they are characterized by being highly non-stationary [21], producing sensitive decision boundaries. An adversarial perturbation $r_{\mathbf{x}}$ temporally incorporates Gaussian noise in the direction of the anisotropically high entropy of EEG data, *i.e.*, samples are disrupted with a direction of entropy maximization [45],

$$r_{\mathbf{x}} = \text{argmin}_{\|r\|<\tau}\max_{\mathbf{p}} H_{\mathbf{p}}(G(\mathbf{x}_1^t+r,\mathbf{x}_2^t)), \tag{11}$$

Algorithm 1 Training algorithm of MACDB.

Inputs: $\mathcal{S}=(\mathbf{X}_1^s,\mathbf{X}_2^s,\mathbf{Y}^s)$ is the labeled source dataset; $\mathcal{T}=(\mathbf{X}_1^t,\mathbf{X}_2^t,\mathbf{Y}^t)$ is the labeled target dataset; λ_m, λ_d, λ_v, α_1, and α_2 are the trade-off hyperparameters; $r_{\mathbf{x}}$ and τ are perturbation hyperparameters.
Output: $G(\cdot;\Theta_{\text{EMA}})$ is a trained bimodal neural network model.
1: Initialize Θ and Θ_{EMA} with random weights.
2: **repeat**
3: Update Θ using gradient descent:

$$\nabla_{\Theta}[\mathbb{E}_{\mathcal{S},\mathcal{T}}\mathcal{L}(\mathbf{X}_1^s,\mathbf{X}_2^s,\mathbf{Y}^s,\mathbf{X}_1^t,\mathbf{X}_2^t,\mathbf{Y}^t,G;\theta,\omega)] \tag{14}$$

where $\mathcal{L}$ is defined in Eq. (1).
4: Compute EMA weights $\Theta_{\text{ema}}^{(n)}$ employing Eq. (13).
5: **until** n number of epochs are completed.

where r is a perturbation value, limited by τ; $H_{\mathbf{p}}$ is the entropy loss. Subsequently, the Kullback–Leibler divergence [37] is used to promote consistent predictions between disrupted and original EEG features. For this, the KL divergence measures the expected value of the log difference between the probability distributions P of data predictions in the original EEG features $\mathbf{x}_1^t$ and the perturbed features $\mathbf{x}_1^t+\mathbf{r}_x$; note that eye movement features $\mathbf{x}_2^t$ remain unchanged. Thus, the consistent prediction loss is defined as

$$\begin{aligned}\mathcal{L}_{con}(\mathbf{X}_1^t,\mathbf{X}_2^t,G;\theta,\omega) = \mathbb{E}_{\mathbf{x_1},\mathbf{x_2}\sim(\mathbf{X}_1^t,\mathbf{X}_2^t)}\textstyle\sum_{i=1}^{C}[\\ \text{KL}(G(\mathbf{x}_1^t,\mathbf{x}_2^t),G(\mathbf{x}_1^t+\mathbf{r}_x,\mathbf{x}_2^t))+ \\ \text{KL}(G(\mathbf{x}_1^t+\mathbf{r}_x,\mathbf{x}_2^t),G(\mathbf{x}_1^t,\mathbf{x}_2^t))],\end{aligned} \tag{12}$$

where KL divergence is applied twice to ensure symmetry, since it is asymmetrical, as opposed to distance. By minimizing this divergence, consistent predictions are encouraged to avoid sensitive boundary decisions and perform effective predictions on a new user.

3.3. Training algorithm

We employ Exponential Moving Average (EMA) [46] to stabilize the trainable parameters of the neural network. For this, EMA averages the trainable parameters Θ over n training steps as follows

$$\Theta_{\text{ema}}^{(n)} = \lambda_{\text{ema}}\cdot\Theta_{\text{ema}}^{(n-1)}+(1-\lambda_{\text{ema}})\cdot\Theta^{(n)}, \tag{13}$$

where λ_{ema} is the decay rate. Then, predictions $\hat{\mathbf{Y}}_u^t$ are computed for a test dataset $\mathbf{X}_u^t$ using the trained model $G(\cdot;\Theta_{\text{ema}}^{(n)})$ instead of $G(\cdot;\Theta)$. Algorithm 1 presents the training procedure used by MACDB. Note that the standard training is performed on a bimodal neural network G using the total loss $\mathcal{L}$ presented in Eq. (1). However, EMA weights $\Theta_{\text{ema}}^{(n)}$ are computed for every training epoch to generate the final model.

Table 2
Deep Neural Network architecture. The design is based on a Deep Feedforward Network, including Fully connected (FC), Batch Normalization (BN) and Dropout (DP) Layers.

ID	Type	Specifications	Dimensions	ID	Type	Specifications	Dimensions
		EEG Subnetwork G_{f_1}				Eye Subnetwork G_{f_2}	
L1	Input	–	(310)	R1	Input	–	(33)
L2	FC	256 units	(256)	R2	FC	256 units	(256)
	BN	Momentum = 0.9			BN	Momentum = 0.9	
	ReLU	–			ReLU	–	
	DP	$p = 0.5$			DP	$p = 0.5$	
L3	FC	128 units	(128)	R3	FC	128 units	(128)
	BN	Momentum = 0.9			BN	Momentum = 0.9	
	ReLU	–			ReLU	–	
	DP	$p = 0.5$			DP	$p = 0.5$	
L4	FC	64 units	(64)	R4	FC	64 units	(64)
	BN	Momentum = 0.9			BN	Momentum = 0.9	
	ReLU	–			ReLU	–	
	DP	$p = 0.5$			DP	$p = 0.5$	
L5	FC	64 units	(64)	R5	FC	64 units	(64)
	BN	Momentum = 0.9			BN	Momentum = 0.9	
	ReLU	–			ReLU	–	
	DP	$p = 0.5$			DP	$p = 0.5$	
S5	SUM			L5 + R5			(64)
				Classifier G_h			
S6	FC			4 units			(4)

3.4. Complexity analysis

We perform a complexity analysis following the work reported in [47]. Since deep domain adaptation methods involve multiple layers with many parameters updated through backpropagation iterations, parallelization with a GPU is required. Thus, the computational complexity of our proposal for training is $O((N_m + N_t) \cdot K \cdot C)$, where N_m is the number of samples in a source domain for each training mini-batch, while N_t is the number of labeled samples of a target domain, K is the number of training iterations, and C is the runtime per sample in one iteration of backpropagation of the neural network. For this, its weights are shared across domains, so that the number of known subjects can be scaled without increasing the space complexity in model storage.

4. Experiments

This section presents the experimental design and results of our proposed method and its comparisons.

4.1. Experimental setting

4.1.1. Datasets

We perform experiments on three public multi-modal datasets containing EEG and eye movement signals: SEED [48], SEED-IV [7] and SEED-V [8]. For EEG signals, a 62-channel ESI neuroscan system was used to collect data with the international 10–20 system for electrode positions. Raw EEG data were initially recorded at 1000 Hz and downsampled to a frequency of 200 Hz. Then, a band-pass filter separated preprocessed data from 0.3 to 50 Hz. Moreover, SMI ETG eye-tracking glasses were used to collect eye movement signals.

SEED includes EEG and eye movement data from 12 native Chinese subjects (6 female and 6 male), watching 15 video clips (4 min long). Three different emotional states were induced (Negative, Neutral, and Positive), while separate sessions were recorded for each subject at different periods.

SEED-IV contains EEG and eye movement data from 15 subjects, who were asked to watch 24 short movie clips (4 min long) for each of the three different sessions. These clips were used to induce happiness, sadness, fear, and neutrality.

SEED-V contains EEG and eye movement data of five induced emotions: happiness, sadness, fear, disgust, and neutrality. Sixteen subjects participated in an experiment, watching 15 movie clips (3 clips for each emotion). Three sessions were recorded in an interval of three days.

4.1.2. Preprocessing and feature extraction

For our experiments, we use the pre-computed features from EEG and eye movement signals provided by SEED-IV and SEED-V datasets [7,8]. For EEG signals, the dataset authors extracted differential entropy (DE) features by using Short Time Fourier Transform (STFT) with no overlapping time windows of 4s in five frequency bands: delta (1–4 Hz), theta (4–8 Hz), alpha (8–14 Hz), beta (14–31 Hz), and gamma (31–50 Hz). Then, the linear dynamic system algorithm was used to minimize artifacts and noise. Each EEG sample comprises information from 62 channels × 5 frequency bands. For eye movement signals, 33 eye movement features were extracted from raw data. These features include statistics of pupil diameter (X and Y),we dispersion (X and Y), fixation duration, blink duration, saccade, and other eye movement events. Data per modality and subject were standardized to mean zero and variance one. SEED-IV comprises 851/832/822 samples for every subject in each session, while SEED-V comprises 681/541/601 samples.

4.1.3. Deep neural network architecture

Table 2 presents the specifications of the deep neural network architecture used in our proposal. We adapted the Deep Feedforward Network architecture presented in [8]. Two subnetworks are used to process modalities separately, and then, learned features are fused by employing a weighted sum. As described above, batch normalization (BN) layers are introduced per modality for feature standardization. In addition, dropout (DP) layers are used to face overfitting. Four hidden layers were considered for each modality subnetwork. Note that the number of classes for SEED, SEED-IV and SEED-V defines the output layer.

4.1.4. Comparison methods and implementation details

Our proposal was compared with the following methods: DCCA [29], FLADA [24], DAAN [20,41], and SMCD [28]. The DCCA method was selected as it is a multi-modal fusion neural network that extracts shared representations from EEG and eye movement signals. FLADA and SMCD were included since they are the most successful single-modal methods proposed for deep SDA in cross-subject EEG-based emotion recognition. Both methods were extended to a multi-modal approach by concatenating the EEG and eye movement features into a single vector, as reported in [15,20]. DAAN is a deep SDA approach, which showed competitive results against the state-of-the-art multi-modal SDA method [20] for cross-subject emotion recognition. Note that various methods have been reported, but they are difficult to implement and reproduce as authors do not share the source code. In this sense, our proposal was also compared with state-of-the-art results

Table 3
Hyperparameter setting of the compared methods. η: learning rate; $\lambda, \lambda_d, \gamma, \sigma$: weight factors for distribution alignment; bs: batch size.

Methods	Hyperparameters
DCCA	$\eta = 0.001,\ bs = 50,\ \alpha_1 = 1.0,\ \alpha_2 = 1.0$
FLADA	$\eta = 0.0001,\ bs = 30,\ \lambda_d = 1.0$
SMCD	$\eta = 0.0001,\ bs = 50,\ \gamma = 0.5,\ \sigma = 0.5$
DAAN	$\eta = 0.001,\ bs = 50,\ \lambda = 0.1$

of deep multi-modal SDA (MMDA-VAE) [20] and multi-modal neural networks, CoDF-Net [30], MSBLS [31], RHPRNet [32], MHESA [39] and RBDRCNN [40] that perform cross-subject emotion recognition from EEG and eye movement signals.

We used coordinate descent [49] to set the hyperparameters of MACDB. For each hyperparameter, coordinate descent first establishes a small finite list of values to explore. Then, it evaluates one hyper-parameter value at a time, updating the current best configuration of hyper-parameters. In this sense, a learning rate of 0.0001 was chosen from a finite list of values based on a logarithmic scale: $\{0.01, 0.001, 0.0001\}$. A batch size of 50 was selected from $\{10, 20, 30, 50, 60\}$, exploring the search space in increments of 10 until the best configuration was found without decreasing the accuracy performance. The weight factors λ_m, λ_d, and λ_v were set to 0.01, 0.5, and 1.0 for SEED, while values of 0.5, 1.0 and 1.0 were established for SEED-IV and SEED-V. These weight factors were selected from $\{0.01, 0.1, 0.5, 1.0\}$ by searching through all the combinations of the hyperparameter values, ensuring change and exploration for the best configuration. Similarly, we explored a combination of values {0.1, 0.5, 1.0} to set the importance of EEG or eye movement features. However, the weights α_1 and α_2 were set to 1.0, suggesting that both modalities are equally important. Moreover, the hyperparameter λ_{ema} was established at 0.995, which is the default value reported in [46]. For JMMD, we adopt a Gaussian kernel with bandwidth set to median pairwise squared distances on the training data, as reported in [44]. For adversarial perturbation, we set values of 3.5 for r and τ, which were selected from {1.5, 3.5, 5.5, 7.5}. Concerning the training algorithm, RMSprop optimizer was employed for 1500 training iterations with a momentum of 0.9, which is the default value.

Table 3 shows the hyperparameter setting of the compared methods. We employed coordinate descent to set hyperparameters, additionally exploring different variations around the recommended hyperparameter values from the original papers. Regarding the optimizer in each training algorithm, we used Adam for DCCA, FLADA, and DAAN, while RSMSProp was employed for SMCD, trained for 1500 iterations.

Our proposal and compared methods were executed on PyTorch 1.9.1 with Python 3.8, using an Intel(R) Core (TM) i7 CPU, NVIDIA GeForce GTX 1080 and Ubuntu Linux 20.04.5 (LTS). We used implementations provided by authors for DCCA, FLADA and DAAN, while our own implementation was used for SMCD.

4.1.5. Evaluation

Our proposal and compared methods were evaluated by using leave-one-subject-out cross-validation (LOSOCV), which is the standard protocol for cross-subject emotion recognition. In LOSOCV, multi-modal data from one subject are used as the target domain, and those of the remaining subjects are regarded as the source domain. This procedure is repeated for each subject until multi-modal data is employed as the target domain. We reported accuracy results for each method across the three available sessions. Two experimental settings were used for supervised domain adaptation. The first one assumes that the test dataset is drawn from a similar distribution as the dataset from the target domain, so that both datasets are standardized using mean and standard deviation from mixed data; this is the standard experimental setting used by SDA for single and multi-modal approaches [20,24]. In the second setting, we assumed that only the target dataset is known, so its mean and variance are employed to standardize each new test sample; this experimental setting is more realistic in practical terms, as the mean and variance from test samples are unknown. For both experimental settings, multi-modal samples from the first trial of a target subject were used as target data, while the rest were employed as test data. The results report five repetitions using different initial neural network weights.

4.2. Results

Table 4 shows the Accuracy, F1-score and AUC results with the assumption that test data are drawn from the same distribution as target data. Our proposal obtained the highest classification results across different sessions on SEED, SEED-IV and SEED-V datasets. The best results of MACDB were obtained with Session 2 on SEED-IV, while Session 3 reported the best result on SEED and SEED-V. In the case of SEED, our proposal exceeded the second-best average result (FLADA) across the three sessions by 2.74, 0.0295, and 0.0205, in terms of Accuracy, F1-score, and AUC results. On the other hand, we observed that MACDB achieved an increment of its gains on SEED-IV and SEED-V, compared to SEED. Specifically, our proposal outperformed the second-best average result (SMCD) by 8.42, 0.0903, and 0.0484 in terms of Accuracy, F1-score, and AUC results on SEED-IV. Similarly, our proposal surpassed the second-best average result (DAAN) by 10.15, 0.1167, and 0.0949 in terms of Accuracy, F1-score, and AUC on SEED-V.

Table 5 presents the classification results when test data are not assumed to be drawn from the same distribution as target data. We observed that all methods decreased their classification results, compared to those reported in Table 4. MACDB achieved the best Accuracy, F1-score, and AUC results across all sessions on SEED-IV and SEED-V, while it obtained the best performances in Sessions 2 and 3 for SEED. The best classification results of our proposal were achieved with Session 3 on SEED and SEED-IV, while Session 2 reported the best results on SEED-V. We observed that MACDB surpassed the second-best average result (DCCA) across the three sessions by 3.06, 0.0337 and 0.0213 in terms of Accuracy, F1-score, and AUC on the SEED dataset. Moreover, our proposal outperformed the second-best average result (SMCD) across all three sessions by 6.66, 0.0767, and 0.0392 in terms of Accuracy, F1-score, and AUC on SEED-IV. Similarly, MACDB improved the second-best average result (SMCD) by 6.75, 0.0792, and 0.0379 in terms of Accuracy, F1-score, and AUC on SEED-V.

Table 6 presents the statistical results obtained from the average accuracy results across the three available sessions on the SEED, SEED-IV, and SEED-V datasets. The Friedman test was first employed to detect significant differences among multiple classification results reported by MACDB and compared methods [50]. Subsequently, the Wilcoxon signed-rank test was applied as a post-hoc procedure to determine pairwise comparisons that produce significant differences. The Finner correction was also used to adjust the p-values as several statistical tests are being performed simultaneously [50]. The Friedman test showed significant differences among compared methods ($p < 0.05$) for all datasets, regardless of whether test data are distributed as target data or not. The Wilcoxon test showed that the difference obtained by MACDB is statistically significant against the compared methods on SEED, except for FLADA, assuming that test data are distributed as target data. Similarly, the difference obtained by our proposal was only significant against SMCD and DAAN when test data are not distributed as target data. On the other hand, we observed that the difference achieved by MACDB is statistically significant (adjusted $p < 0.05$) against all compared methods on SEED-IV and SEED-V, when test data are distributed as target data, as well as the case where they are not.

4.2.1. Comparison with state-of-the-art methods

Table 7 displays the classification results of MACDB and state-of-the-art methods based on multi-modal supervised domain adaptation

Table 4
Classification results of MACDB and compared methods on SEED, SEED-IV and SEED-V, under the assumption that test data are drawn from the same distribution as target data. The highest results are in bold.

SEED												
Method	Session 1			Session 2			Session 3			Average		
	Accuracy	F1-score	AUC	Accuracy	F1-score	AUC	Accuracy	F1-score	AUC	Accuracy	F1-score	AUC
SMCD	77.29 ± 20.90	0.7543 ± 0.2153	0.8302 ± 0.2149	78.12 ± 17.67	0.7714 ± 0.1788	0.8352 ± 0.1756	76.20 ± 09.24	0.7478 ± 0.1038	0.8217 ± 0.0680	77.20	0.7578	0.8290
DCCA	82.76 ± 08.65	0.8238 ± 0.0860	0.8707 ± 0.0644	78.92 ± 11.31	0.7870 ± 0.1141	0.8418 ± 0.0848	80.40 ± 13.22	0.7976 ± 0.1361	0.8519 ± 0.0994	80.69	0.8028	0.8548
DAAN	82.25 ± 09.85	0.8130 ± 0.1099	0.8669 ± 0.0726	79.48 ± 13.68	0.7825 ± 0.1537	0.8459 ± 0.1053	81.16 ± 07.57	0.8066 ± 0.0767	0.8587 ± 0.0569	80.96	0.8007	0.8572
FLADA	85.74 ± 08.26	0.8527 ± 0.0854	0.8931 ± 0.0611	80.36 ± 12.73	0.7960 ± 0.1365	0.8519 ± 0.0962	85.73 ± 08.97	0.8511 ± 0.0959	0.8927 ± 0.0675	83.94	0.8333	0.8792
MACDB (Ours)	**88.16** ± 11.02	**0.8797** ± 0.1127	**0.9109** ± 0.0834	**83.21** ± 12.43	**0.8256** ± 0.1303	**0.8733** ± 0.0943	**88.68** ± 09.75	**0.8831** ± 0.1044	**0.9149** ± 0.0738	**86.68**	**0.8628**	**0.8997**
SEED-IV												
Method	Session 1			Session 2			Session 3			Average		
	Accuracy	F1-score	AUC	Accuracy	F1-score	AUC	Accuracy	F1-score	AUC	Accuracy	F1-score	AUC
DCCA	62.92 ± 10.70	0.6146 ± 0.1123	0.7522 ± 0.0729	74.13 ± 08.43	0.7270 ± 0.0839	0.8232 ± 0.0552	72.08 ± 10.51	0.7068 ± 0.1042	0.8147 ± 0.0690	69.71	0.6828	0.7967
DAAN	72.56 ± 08.11	0.7131 ± 0.0958	0.8255 ± 0.0512	77.47 ± 10.00	0.7598 ± 0.0961	0.8463 ± 0.0640	74.26 ± 11.28	0.7286 ± 0.1171	0.8272 ± 0.0727	74.76	0.7338	0.8330
FLADA	72.89 ± 10.40	0.7273 ± 0.1059	0.8218 ± 0.0701	76.84 ± 10.85	0.7506 ± 0.1084	0.8417 ± 0.0719	75.66 ± 10.34	0.7463 ± 0.1166	0.8369 ± 0.0726	75.13	0.7414	0.8335
SMCD	72.48 ± 11.12	0.7143 ± 0.1214	0.8263 ± 0.0705	78.34 ± 08.01	0.7687 ± 0.0902	0.8593 ± 0.0532	79.03 ± 07.97	0.7730 ± 0.0969	0.8653 ± 0.0536	76.61	0.7520	0.8503
MACDB (Ours)	**82.38** ± 09.81	**0.8226** ± 0.0988	**0.8862** ± 0.0653	**86.62** ± 06.52	**0.8510** ± 0.0774	**0.9024** ± 0.0499	**86.10** ± 10.02	**0.8534** ± 0.1099	**0.9075** ± 0.0679	**85.03**	**0.8423**	**0.8987**
SEED-V												
Method	Session 1			Session 2			Session 3			Average		
	Accuracy	F1-score	AUC	Accuracy	F1-score	AUC	Accuracy	F1-score	AUC	Accuracy	F1-score	AUC
DCCA	61.00 ± 15.52	0.5704 ± 0.1614	0.7512 ± 0.0961	65.85 ± 17.66	0.6252 ± 0.1757	0.7776 ± 0.1076	64.14 ± 22.39	0.6056 ± 0.2293	0.7691 ± 0.1380	63.66	0.6004	0.7660
FLADA	67.46 ± 16.47	0.6430 ± 0.1842	0.7911 ± 0.0990	70.42 ± 15.93	0.6554 ± 0.1630	0.8056 ± 0.1043	77.95 ± 17.03	0.7538 ± 0.1842	0.8571 ± 0.1004	71.94	0.6841	0.8179
SMCD	76.91 ± 13.70	0.7441 ± 0.1635	0.8549 ± 0.0850	72.27 ± 16.32	0.6795 ± 0.1872	0.8258 ± 0.0989	74.92 ± 13.00	0.6973 ± 0.1552	0.8351 ± 0.0800	74.70	0.7070	0.8386
DAAN	77.70 ± 12.68	0.7566 ± 0.1300	0.8581 ± 0.0776	71.96 ± 16.09	0.6801 ± 0.1696	0.8265 ± 0.0912	79.33 ± 15.14	0.7664 ± 0.1574	0.8689 ± 0.0915	76.33	0.7344	0.8179
MACDB (Ours)	**85.98** ± 12.06	**0.8457** ± 0.1327	**0.9088** ± 0.0787	**85.65** ± 16.01	**0.8445** ± 0.1767	**0.9118** ± 0.0949	**87.82** ± 10.45	**0.8630** ± 0.1148	**0.9179** ± 0.0688	**86.48**	**0.8511**	**0.9128**

Table 5
Classification results of MACDB and compared methods on SEED, SEED-IV and SEED-V, when test data are not assumed to be drawn from the same distribution as target data. The highest results are in bold.

SEED												
Method	Session 1			Session 2			Session 3			Average		
	Accuracy	F1-score	AUC	Accuracy	F1-score	AUC	Accuracy	F1-score	AUC	Accuracy	F1-score	AUC
DAAN	67.49 ± 11.69	0.6481 ± 0.1326	0.7552 ± 0.0869	59.23 ± 18.92	0.5607 ± 0.2001	0.6951 ± 0.1406	63.62 ± 13.62	0.5967 ± 0.1702	0.7281 ± 0.0997	63.45	0.6018	0.7261
SMCD	65.42 ± 11.94	0.6343 ± 0.1249	0.7402 ± 0.0903	62.35 ± 14.38	0.5781 ± 0.1779	0.7165 ± 0.1083	62.90 ± 17.63	0.5970 ± 0.1971	0.7227 ± 0.1305	63.56	0.6031	0.7265
FLADA	69.23 ± 10.28	0.6642 ± 0.1217	0.7676 ± 0.0773	64.05 ± 14.03	0.6106 ± 0.1613	0.7303 ± 0.1048	63.32 ± 10.53	0.5982 ± 0.1280	0.7246 ± 0.0781	65.53	0.6243	0.7408
DCCA	**70.03** ± 10.09	**0.6726** ± 0.1256	**0.7744** ± 0.0757	65.12 ± 12.60	0.6395 ± 0.1403	0.7419 ± 0.0984	63.99 ± 14.14	0.6042 ± 0.1756	0.7292 ± 0.1039	66.38	0.6388	0.7485
MACDB (Ours)	68.92 ± 14.81	0.6712 ± 0.1596	0.7648 ± 0.1137	**69.59** ± 11.92	**0.6707** ± 0.1371	**0.7711** ± 0.0883	**69.80** ± 17.25	**0.6757** ± 0.1844	**0.7736** ± 0.1283	**69.44**	**0.6725**	**0.7698**
SEED-IV												
Method	Session 1			Session 2			Session 3			Average		
	Accuracy	F1-score	AUC	Accuracy	F1-score	AUC	Accuracy	F1-score	AUC	Accuracy	F1-score	AUC
DCCA	50.48 ± 10.90	0.4465 ± 0.1279	0.6697 ± 0.0735	57.52 ± 11.85	0.5469 ± 0.1383	0.7201 ± 0.0829	61.93 ± 09.04	0.5752 ± 0.1133	0.7409 ± 0.0649	56.64	0.5229	0.7102
DAAN	57.04 ± 13.76	0.5479 ± 0.1606	0.7269 ± 0.0878	60.30 ± 11.80	0.5773 ± 0.1314	0.7394 ± 0.0814	62.22 ± 14.04	0.6067 ± 0.1496	0.7567 ± 0.0926	59.85	0.5773	0.7410
FLADA	56.16 ± 13.11	0.5268 ± 0.1529	0.7094 ± 0.0857	65.08 ± 14.97	0.6056 ± 0.1659	0.7601 ± 0.0968	66.27 ± 10.82	0.6411 ± 0.1309	0.7774 ± 0.0781	62.50	0.5912	0.7490
SMCD	61.53 ± 15.31	0.6007 ± 0.1603	0.7574 ± 0.0965	63.14 ± 11.68	0.6085 ± 0.1249	0.7676 ± 0.0740	68.36 ± 10.11	0.6620 ± 0.1053	0.7972 ± 0.0649	64.34	0.6238	0.7741
MACDB (Ours)	**68.79** ± 13.97	**0.6853** ± 0.1448	**0.8026** ± 0.0902	**70.74** ± 07.09	**0.6973** ± 0.0736	**0.8120** ± 0.0452	**73.48** ± 07.25	**0.7189** ± 0.0825	**0.8253** ± 0.0534	**71.00**	**0.7005**	**0.8133**
SEED-V												
Method	Session 1			Session 2			Session 3			Average		
	Accuracy	F1-score	AUC	Accuracy	F1-score	AUC	Accuracy	F1-score	AUC	Accuracy	F1-score	AUC
DCCA	47.73 ± 16.57	0.4211 ± 0.1775	0.6775 ± 0.0924	49.20 ± 16.25	0.4281 ± 0.1641	0.6804 ± 0.0961	49.26 ± 18.13	0.4286 ± 0.1949	0.6785 ± 0.1112	48.73	0.4259	0.6788
FLADA	54.86 ± 19.19	0.5057 ± 0.1890	0.7191 ± 0.1129	57.34 ± 15.26	0.5151 ± 0.1826	0.7284 ± 0.0986	62.20 ± 15.07	0.5511 ± 0.1693	0.7585 ± 0.0918	58.13	0.5240	0.7353
DAAN	56.65 ± 17.57	0.5234 ± 0.1865	0.7365 ± 0.1038	64.58 ± 16.02	0.5824 ± 0.1657	0.7722 ± 0.0931	65.53 ± 17.80	0.6019 ± 0.1985	0.7836 ± 0.1053	62.25	0.5692	0.7641
SMCD	61.23 ± 20.57	0.5760 ± 0.2239	0.7681 ± 0.1252	64.67 ± 18.45	0.5822 ± 0.2087	0.7784 ± 0.1116	68.86 ± 12.33	0.6156 ± 0.1579	0.7966 ± 0.0760	65.15	0.5913	0.7810
MACDB (Ours)	**69.41** ± 18.10	**0.6565** ± 0.1999	**0.8115** ± 0.1127	**74.06** ± 17.86	**0.6929** ± 0.2078	**0.8339** ± 0.1063	**72.24** ± 13.93	**0.6620** ± 0.1715	**0.8114** ± 0.0913	**71.90**	**0.6705**	**0.8189**

on SEED, SEED-IV, and SEED-V. We also included multi-modal neural networks that perform cross-subject emotion recognition from EEG and eye movement signals. Our proposal was compared by reproducing the experimental setting in each reported work. The compared methods assume that test data are drawn from the same distribution as target data. When multi-modal data from the three sessions are combined for SEED, our proposal outperformed the best method (MSBLS) by 1.39 pp for its best execution, while a slight improvement of 0.33 pp was observed when averaging over five executions. Note that MACDB obtained the lowest standard deviation (4.04) compared to MSBLS (6.40). Moreover, our proposal outperformed the state-of-the-art results (RHPRNet) by at least 15 and 14 pp on SEED-IV and SEED-V, combining multi-modal data from the three available sessions. When the evaluation is only performed on multi-modal data from Session 1, MACDB outperformed the state-of-the-art results of MMDA-VAE by 2.88 and 3.93 pp on SEED for its average performance and best performance over five executions. Similarly, our proposal surpassed MMDA-VAE by 7.76 and 6.86 pp on SEED-IV in terms of best and average results, respectively.

4.2.2. Confusion matrices

Figs. 2–4 present the confusion matrices for the best sessions on SEED, SEED-IV, and SEED-V. In the case of SEED, we observed that recognition is more straightforward on neutral and positive emotions than on its negative counterpart, regardless of the assumption that test data have the same distribution as target data. For the SEED-IV dataset, neutral and fear emotions are more sensitive to be recognized than emotions of sadness and happiness, under the assumption that test data are drawn from the same distribution as target data. However, sadness and fear obtained a better recognition performance than neutrality and fear, when test data were not assumed to be drawn from the target distribution. Finally, for SEED-V, it is evident that fear, neutrality and happiness emotions are the easiest to distinguish, while disgust and sadness are the most difficult to recognize, under the assumption that test data are drawn from the same distribution that target data. Moreover, we can see that fear and happiness still maintain a high recognition performance. In contrast, disgust and sadness are difficult to recognize, assuming that test data are not drawn from the target distribution.

Table 6
Statistical results for MACDB and compared methods on SEED, SEED-IV, and SEED-V datasets. The Friedman test, followed by Wilcoxon post-hoc analysis, was applied to the average accuracy across the three sessions for each dataset.

	SEED	SEED-IV	SEED-V
Test data are distributed as target data			
	Friedman test:		
	$\chi^2(4) = 15.8,\ p = 0.0033$	$\chi^2(4) = 35.31,\ p = 0.00$	$\chi^2(4) = 46,\ p = 0.00$
	Wilcoxon post-hoc (adjusted p-values)		
MACDB vs DAAN	† 0.0060	† 0.0013	† 0.0009
MACDB vs SMCD	† 0.0044	† 0.0013	† 0.0009
MACDB vs DCCA	† 0.0100	† 0.0013	† 0.0009
MACDB vs FLADA	∼ 0.3474	† 0.0013	† 0.0009
Test data are not distributed as target data			
	Friedman test:		
	$\chi^2(4) = 19.93,\ p = 0.0005$	$\chi^2(4) = 31.57,\ p = 0.00$	$\chi^2(4) = 46.50,\ p = 0.00$
	Wilcoxon post-hoc (adjusted p-values)		
MACDB vs SMCD	† 0.0044	† 0.0013	† 0.0009
MACDB vs DAAN	† 0.0228	† 0.0013	† 0.0009
MACDB vs FLADA	∼ 0.0770	† 0.0013	† 0.0009
MACDB vs DCCA	∼ 0.0770	† 0.0013	† 0.0009

Note: † significant ($p < 0.05$), ∼ nonsignificant.

Table 7
Accuracy (%) comparison with different studies that performed LOSOCV on SEED, SEED-IV and SEED-V.

Method	SEED	SEED-IV	SEED-V
Combination of data from the three sessions			
CoDF-Net [30]	87.04 ± 06.58	–	–
MSBLS [31]	90.16 ± 06.40	–	–
RHPRNet [32]	–	67.92 ± 07.26	68.44 ± 12.25
MACDB (Ours)			
- Best execution	**91.55** ± 04.73	**83.46** ± 04.94	**84.27** ± 11.26
- Average	90.49 ± 04.04	83.02 ± 04.67	83.28 ± 11.38
Average accuracy across the three sessions			
MHESA [39]	–	83.25	–
MACDB (Ours)			
- Best execution	**86.73**	**85.75**	**87.46**
- Average	86.68	85.03	86.48
Session 1			
DAAN [20]	83.54 ± 09.81	75.36 ± 08.87	–
MMDA-VAE [20]	85.07 ± 11.81	75.52 ± 10.21	–
MACDB (Ours)			
- Best execution	**89.00** ± 11.99	**83.28** ± 08.90	**86.99** ± 12.92
- Average	87.95 ± 11.85	82.38 ± 06.65	85.98 ± 12.06
Best session			
RBDRCNN-LMFK [40]	–	87.56	–
MACDB (Ours)			
- Best execution	**92.05** ± 06.77	**88.52** ± 07.60	**89.34** ± 09.86
- Average	90.27 ± 07.26	86.62 ± 06.52	87.82 ± 10.45

4.2.3. Ablation study

Table 8 shows the effect of each component in MACDB. When EMA is used to stabilize the learned weights of the neural network model, improvements of 0.53 and 0.27 pp are observed over the SEED-IV and SEED-V datasets. Also, an improvement of 7.12 pp is observed by applying our multi-level alignment strategy on SEED-V, but no improvement is recorded on SEED-IV. By incorporating consistent decision boundaries, an increment of 2.0 pp can be achieved on SEED-IV, but a slight decrement in accuracy is observed on SEED-V.

We analyze our multi-level alignment strategy by individually removing each component from MACDB. We observed decrements of 1.98 and 4.24 pp on SEED-IV and SEED-V, when the modality alignment was removed. By discarding the alignment between modalities via angular cosine distance, an improvement of 0.41 pp was observed on SEED-IV, while a decrement of 2.0 pp was obtained on SEED-V. Although these results indicate a slight negative effect on SEED-IV, they suggest that specific scenarios as in SEED-V require to exploit statistical relationships between modality features. Likewise, our proposal reduced its performance by 1.76 pp when the domain alignment module was discarded on SEED-IV, while a similar performance was observed on SEED-V.

4.2.4. Effect of recalibration data

We analyze the effect of recalibration data for supervised domain adaptation on SEED-IV and SEED-V, varying the number of target samples per class from the first trial of the best session. Table 9 presents the classification results when test data are assumed to come from the target distribution. For both datasets, stable results are observed during the evaluation at most 20 and 10 labeled target samples per class on SEED-IV and SEED-V, respectively. We noticed that MACDB slightly increased its accuracy performance on SEED-IV whenever the complete

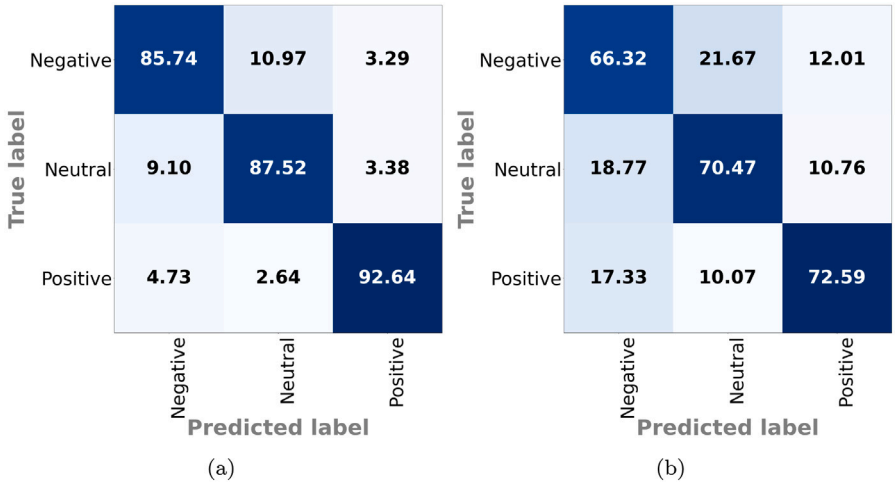

Fig. 2. Confusion matrices of MACDB for Session 3 on SEED, under the assumption that (a) test data are drawn from the same distribution as target data and (b) test data are not drawn from the same distribution as target data.

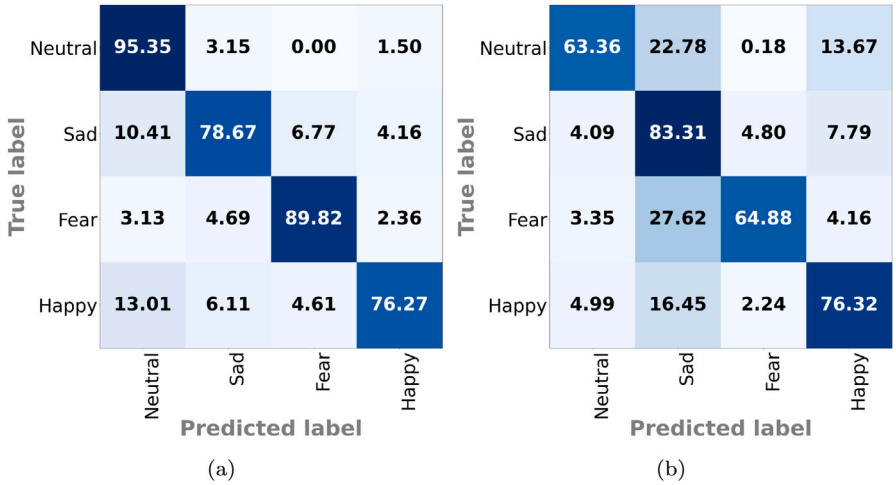

Fig. 3. Confusion matrices of MACDB for Session 2 on SEED-IV, under the assumption that (a) test data are drawn from the same distribution as target data and (b) test data are not drawn from the same distribution as target data.

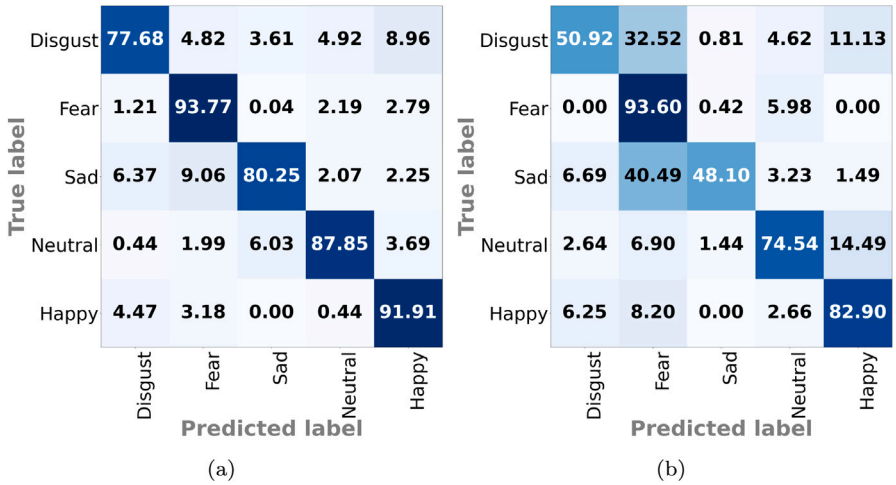

Fig. 4. Confusion matrices of MACDB for Session 3 on SEED-V, under the assumption that (a) test data are drawn from the same distribution as target data and (b) test data are not drawn from the same distribution as target data.

trial is employed. Meanwhile, a slight performance decrement is observed on SEED-V when samples of the completed trial are employed during training.

Table 10 shows the classification results when test data are not assumed to be drawn from the same distribution as target data. Stable

Table 8
Ablation study of MACDB for Session 1 on SEED-IV and SEED-V.

Method	SEED-IV	SEED-V
DFN (Baseline)	79.88 ± 10.72	78.77 ± 14.66
DFN+EMA	80.41 ± 09.01	79.04 ± 15.82
DFN+EMA+Multi-level alignment(MA)	80.32 ± 10.98	86.16 ± 13.91
MACDB (DFN+EMA+MA+Consistent Decision Boundaries)	82.32 ± 09.81	85.98 ± 12.06
– Alignment per modality	80.34 ± 11.32	81.74 ± 14.00
– Alignment between modalities	82.73 ± 09.97	83.98 ± 13.89
– Alignment between domains	80.56 ± 11.56	85.80 ± 12.23

Table 9
Effect of the number of target samples on SEED-IV and SEED-V under the assumption that test data are assumed to be drawn from the target distribution. The complete EEG trial is composed of around 25 and 13 samples per class for SEED-IV and SEED-V, respectively.

	5	10	20	Trial
SEED-IV	85.93 ± 06.47	86.03 ± 06.63	85.86 ± 06.10	86.62 ± 06.52
SEED-V	88.41 ± 11.97	88.80 ± 11.85	–	87.82 ± 10.45

Table 10
Effect of the number of target samples on SEED-IV and SEED-V when test data are not assumed to be drawn from the target distribution. The complete EEG trial is composed of around 25 and 13 samples per class for SEED-IV and SEED-V, respectively.

	5	10	20	Trial
SEED-IV	75.57 ± 07.96	76.66 ± 07.69	76.32 ± 08.25	73.48 ± 07.25
SEED-V	76.31 ± 15.12	75.86 ± 16.20	–	74.06 ± 17.86

Table 11
Hyperparameter sensitivity on (a) SEED-IV and (b) SEED-V when data from the test set are assumed to be drawn from the target distribution.

	0.01	0.1	0.5	1.0
		SEED-IV		
λ_d	80.92 ± 11.61	81.10 ± 12.23	82.38 ± 09.81	81.07 ± 11.90
λ_m	81.61 ± 10.30	81.55 ± 11.54	81.87 ± 10.64	82.38 ± 09.81
λ_v	81.77 ± 11.27	81.65 ± 10.32	82.31 ± 11.14	82.38 ± 09.81
		SEED-V		
λ_d	85.14 ± 11.97	85.47 ± 12.33	85.98 ± 12.06	85.96 ± 10.89
λ_m	83.68 ± 12.64	85.13 ± 12.24	85.79 ± 12.08	85.98 ± 12.06
λ_v	85.60 ± 11.77	85.51 ± 13.29	85.44 ± 12.17	85.98 ± 12.06

results are achieved by including at most 20 labeled target samples per class on SEED-IV, and 10 in the case of SEED-V. However, we observed a performance decrement whenever samples from the complete trial are employed as target data for both datasets. It suggests that noise could be still present in target data, negatively affecting the classification results.

4.2.5. Parameter sensitivity

We present a study with the performance of MACDB using regularization hyperparameters λ_d, λ_m and λ_v. Table 11 shows the average accuracy for the three parameters across different values in Session 1 on SEED-IV and SEED-V datasets. In the case of SEED-IV, we observed that hyperparameters λ_m and λ_v obtained stable results across different evaluated values, showing a better performance at 0.5 and 1.0. Moreover, λ_d showed a better performance at 0.5, compared to the remaining values. For SEED-V, we observed that λ_d and λ_v obtained stable results across a range of values, while λ_m obtained its better performance at 0.5 and 1.0.

5. Discussion

We evaluated and validated MACDB on three public benchmarks, considering two different experimental settings. The first one assumes that the test dataset is part of the target domain and such dataset is standardized employing mean and variance statistics from the target and testing datasets. However, in practical terms, the mean and variance of testing data are unknown as samples are evaluated individually. Thus, a second experimental setting was designed to avoid such standardization, only employing mean and variance from the target data, extracted from the first recorded trial. Our results in Tables 4–5 showed that our proposal and compared methods reduced their classification performance under the second setting. Likewise, we found that existing works performed a better knowledge transfer on SEED than on SEED-IV and SEED-V, as competitive classification results were observed compared to our proposal. A particular case was seen for Session 1 on SEED under the assumption that test data are not distributed as target data, since DCCA and FLADA obtained a better performance than MACDB. However, DCCA and FLADA did not achieve the same performance on the rest of the two sessions on SEED, suggesting that their strategies are insufficient for domain distribution alignment from multi-modal data across different subjects. Table 6 confirmed that some compared methods (FLADA and DCCA) obtained competitive results against MACDB on SEED by applying a statistical test over average accuracies across the available sessions. Nevertheless, improvements of our proposal against all compared methods were statistically significant on SEED-IV and SEED-V, regardless of whether test data are distributed as target data or not. Despite the above, MACDB reported the best average accuracy across the available sessions, establishing the state-of-the-art results on SEED, SEED-IV, and SEED-V. Regarding other evaluation metrics, the F1-score confirmed the superior performance

of MACDB in terms of the average precision and recall across the three sessions for emotion recognition from EEG and eye movement signals. Similarly, AUC results corroborated the ability of MACDB to correctly predict classes, compared to existing methods.

Through confusion matrices we found that emotions cannot be similarly distinguished under our two experimental settings. Specifically, on SEED-IV, neutrality and fear are more likely to be detected under the assumption that test data are drawn from the same distribution as target data. Similarly, on SEED-V, emotions such as disgust, sadness and neutrality are more difficult to recognize when test data are not assumed to be distributed as target data.

We discuss the state-of-the-art results presented in Table 7. Concerning SEED results while combining data from the three available sessions, we found that MACDB obtained similar performance (90.49% vs. 90.16%) to the best-reported network (MSBLS) with the lowest standard deviation (4.04), averaging over five executions. Furthermore, our proposal outperformed MSBLS by 1.39 pp on SEED during its best execution (91.55% vs. 90.16%). Note that deep neural networks are sensitive to random weight initializations, producing different classification results. Nevertheless, existing works report their results employing only one execution. Regarding SEED-IV results with the same experimental setting, we can see that MACDB outperformed the best reported multi-modal network (RHPRNet) by at least 15 pp. Similarly, our proposal improved the reported results of RHPRNet on SEED-V by at least 14.84 pp. When evaluating across the three sessions, we observed that MACDB outperformed MHESA by 1.78 pp. (85.03% vs. 83.25%) on average over five executions, while the best execution of our proposal obtained a gain of 2.5 pp. (85.75% vs. 83.25%). Note that MMDA-VAE [20] is the state-of-the-art SDA method for multi-modal cross-subject emotion recognition from EEG and eye movement signals. This method was evaluated with only one session on SEED and SEED-IV. From the reported results in [20], MMDA-VAE outperformed DAAN by 1.53 pp (83.54% vs. 85.07%) on SEED, but DAAN achieved a similar accuracy (75.52% vs. 75.36%) with a lower standard deviation than MMDA-VAE (10.21 vs. 08.87) on SEED-IV. From our experiments, our DAAN implementation obtained 83.21 $\pm$ 08.41% and 74.03 $\pm$ 09.07% on SEED and SEED-IV for its best repetition, averaging 82.25 $\pm$ 09.85% and 72.57 $\pm$ 08.12% over five executions with different initial neural network weights. We observed that MACDB outperformed the reported results of DAAN and MMDA-VAE by 4.41 and 2.88 pp by averaging over five executions, while improvements of 7.02 and 6.86 pp were observed on SEED-IV. These gains increased with respect to the best execution of MACDB, surpassing DAAN and MMDA-VAE by 5.46 and 3.93 pp on SEED, as well as 7.92 and 7.76 pp on SEED-IV. With respect to the best session, RBDRCNN-LMFK achieved 87.56% accuracy on SEED-IV, which is 0.94 pp higher than the average accuracy of MACDB (86.62%) over five executions. However, our proposal outperformed RBDRCNN-LMFK by 0.96 pp (87.56% vs. 88.52%) for its best execution.

From our ablation study on SEED-IV and SEED-V datasets, we found that our multi-level alignment strategy improved knowledge transfer between subjects, compared to separately employing distribution alignment. For this, strategies such as batch normalization, angular cosine distance and JMMD were used to align distribution divergence per modality, between modalities and between domains, respectively. Moreover, although encouraging consistent predictions did not improve the classification results on SEED-V, we observed an improvement on SEED-IV, suggesting that specific scenarios require encouraging consistent decision boundaries on the target domain to achieve a better knowledge transfer. For this, adversarial perturbations were introduced on EEG data, indicating that such data can be sensitive and misclassified.

We analyzed the effect of target data extracted from the first trial. From our study, we found that only five samples per class achieved similar results than using all samples from the complete trial. Indeed, worse classification results are observed when the whole trial is used and test data are not assumed to be drawn from the same distribution as target data. Finally, we found that MACDB consistently obtained higher classification results than the second-best method.

In terms of limitations, the framework used by MACDB was designed to exploit data from EEG and eye movement signals across different subjects, but it must be redesigned when more modalities are incorporated. Likewise, MACDB achieved the highest average results across the three sessions by using a Deep Feedforward Network, the most basic neural network. However, we did not explore more complex architectures as reported in [31,51], which could improve the performance of cross-subject emotion recognition from EEG and eye movement signals.

6. Conclusion

In this paper, we present a multi-modal supervised domain adaptation method for cross-subject emotion recognition from EEG and eye movement signals. Our proposal, named MACDB, incorporates a three-fold strategy for multi-level alignment and encourages consistent decision boundaries to ensure a correct knowledge transfer between subjects, allowing to build effective classifiers on new users. Our experiments showed that the proposed method scored the highest average accuracy across the three available sessions by obtaining 86.68%, 85.03%, and 86.48% on SEED, SEED-IV and SEED-V, under the assumption that test data are drawn from the same distribution as target data. Similarly, MACDB reported the highest average accuracy by achieving 69.44%, 71.00%, and 71.90% on SEED, SEED-IV and SEED-V, when test data are not assumed to have a similar distribution to data from the target domain. Our results indicated that an effective knowledge transfer can be achieved between subjects, outperforming state-of-the-art results in emotion recognition from EEG and eye movement signals, regardless of the assumption of how the test data are distributed. One advantage of MACDB is the capacity to maintain the similar or better accuracy results while employing a reduced number of samples per class from the recalibration data. For future work, we plan to incorporate multi-source domain adaptation to improve the multi-level distribution alignment between subjects. A weight-based strategy will be developed to discard irrelevant elements at class and sample levels that produce a negative transfer. Finally, we will design a neural network to learn the relationship among brain regions to produce better discriminative features.

CRediT authorship contribution statement

Magdiel Jiménez-Guarneros: Writing – review & editing, Writing – original draft, Validation, Software, Resources, Project administration, Methodology, Investigation, Funding acquisition, Formal analysis, Conceptualization. **Gibran Fuentes-Pineda:** Writing – review & editing, Validation, Supervision.

Declaration of competing interest

The authors declare that they have no known competing financial interests or personal relationships that could have appeared to influence the work reported in this paper.

Acknowledgments

This work was supported by UNAM Posdoctoral Program and the Secretariat of Science, Humanities, Technology and Innovation (SECIHTI), provided to M. Jiménez-Guarneros. We thank Mr. Onésimo Bulmaro Jiménez-Sánchez for providing Magdiel with guidance and advice.

Data availability

The authors do not have permission to share data.

References

[1] S. Zhao, G. Jia, J. Yang, G. Ding, K. Keutzer, Emotion recognition from multiple modalities: Fundamentals and methodologies, IEEE Signal Process. Mag. 38 (6) (2021) 59–73.

[2] B. Shneiderman, C. Plaisant, M. Cohen, S. Jacobs, N. Elmqvist, N. Diakopoulos, Designing the user interface: strategies for effective human–computer interaction, Pearson (2016).

[3] J. Zhang, Z. Yin, P. Chen, S. Nichele, Emotion recognition using multi-modal data and machine learning techniques: A tutorial and review, Inf. Fusion 59 (2020) 103–126.

[4] Q. Wang, M. Wang, Y. Yang, X. Zhang, Multi-modal emotion recognition using eeg and speech signals, Comput. Biol. Med. 149 (2022) 105907.

[5] Siddharth T. Jung, T.J. Sejnowski, Utilizing deep learning towards multi-modal bio-sensing and vision-based affective computing, IEEE Trans. Affect. Comput. 13 (1) (2022) 96–107.

[6] A.M. Yildiz, M. Tanabe, M. Kobayashi, I. Tuncer, P.D. Barua, S. Dogan, T. Tuncer, R.-S. Tan, U.R. Acharya, Ff-btp model for novel sound-based community emotion detection, IEEE Access 11 (2023) 108705–108715.

[7] W.-L. Zheng, W. Liu, Y. Lu, B.-L. Lu, A. Cichocki, Emotionmeter: A multimodal framework for recognizing human emotions, IEEE Trans. Cybern. 49 (3) (2019) 1110–1122.

[8] W. Liu, J.-L. Qiu, W.-L. Zheng, B.-L. Lu, Comparing recognition performance and robustness of multimodal deep learning models for multimodal emotion recognition, IEEE Trans. Cogn. Dev. Syst. 14 (2) (2021) 715–729.

[9] Y.-T. Lan, W. Liu, B.-L. Lu, Multimodal emotion recognition using deep generalized canonical correlation analysis with an attention mechanism, in: 2020 International Joint Conference on Neural Networks, IJCNN, 2020, pp. 1–6.

[10] S. Zhu, J. Qi, J. Hu, S. Hao, A new approach for product evaluation based on integration of eeg and eye-tracking, Adv. Eng. Inform. 52 (2022) 101601.

[11] X. Wu, W.-L. Zheng, Z. Li, B.-L. Lu, Investigating eeg-based functional connectivity patterns for multimodal emotion recognition, J. Neural Eng. 19 (1) (2022) 016012.

[12] Q. Wang, M. Wang, Y. Yang, X. Zhang, Multi-modal emotion recognition using eeg and speech signals, Comput. Biol. Med. 149 (2022) 105907.

[13] C. Li, Z. Bao, L. Li, Z. Zhao, Exploring temporal representations by leveraging attention-based bidirectional lstm-rnns for multi-modal emotion recognition, Inf. Process. Manage. 57 (3) (2020) 102185.

[14] Y. Zhang, H. Liu, D. Wang, D. Zhang, T. Lou, Q. Zheng, C. Quek, Cross-modal credibility modelling for eeg-based multimodal emotion recognition, J. Neural Eng. 21 (2) (2024) 026040.

[15] C. Chen, C.-M. Vong, S. Wang, H. Wang, M. Pang, Easy domain adaptation for cross-subject multi-view emotion recognition, Knowl.-Based Syst. 239 (2022) 107982.

[16] L. Gong, W. Chen, M. Li, T. Zhang, Emotion recognition from multiple physiological signals using intra- and inter-modality attention fusion network, Digit. Signal Process. 144 (2024) 104278.

[17] J. Yin, M. Wu, Y. Yang, P. Li, F. Li, W. Liang, Z. Lv, Research on multimodal emotion recognition based on fusion of electroencephalogram and electrooculography, IEEE Trans. Instrum. Meas. 73 (2024) 1–12.

[18] Y. Dai, Z. Yan, J. Cheng, X. Duan, G. Wang, Analysis of multimodal data fusion from an information theory perspective, Inform. Sci. 623 (2023) 164–183.

[19] W.-L. Zheng, J.-Y. Zhu, B.-L. Lu, Identifying stable patterns over time for emotion recognition from eeg, IEEE Trans. Affect. Comput. 10 (3) (2019) 417–429.

[20] Y. Wang, S. Qiu, D. Li, C. Du, B.-L. Lu, H. He, Multi-modal domain adaptation variational autoencoder for eeg-based emotion recognition, IEEE/ CAA J. Autom. Sin. 9 (9) (2022) 1612–1626.

[21] F. Lotte, Signal processing approaches to minimize or suppress calibration time in oscillatory activity-based brain x2013;computer interfaces, Proc. IEEE 103 (6) (2015) 871–890.

[22] W. Li, B. Hou, X. Li, Z. Qiu, B. Peng, Y. Tian, Tmlp+srdann: A domain adaptation method for eeg-based emotion recognition, Measurement 207 (2023) 112379.

[23] Y. Wang, S. Qiu, X. Ma, H. He, A prototype-based spd matrix network for domain adaptation eeg emotion recognition, Pattern Recognit. 110 (2021) 107626.

[24] Y. Wang, J. Liu, Q. Ruan, S. Wang, C. Wang, Cross-subject eeg emotion classification based on few-label adversarial domain adaption, Expert Syst. Appl. 185 (2021) 115581.

[25] H. Tang, G. Jiang, Q. Wang, Deep neural network for emotion recognition based on meta-transfer learning, IEEE Access 10 (2022) 78114–78122.

[26] J. Bi, F. Wang, X. Yan, J. Ping, Y. Wen, Multi-domain fusion deep graph convolution neural network for eeg emotion recognition, Neural Comput. Appl. 34 (24) (2022) 22241–22255.

[27] L. Chen, Q. She, M. Meng, Q. Zhang, J. Zhang, Similarity constraint style transfer mapping for emotion recognition, Biomed. Signal Process. Control. 80 (2023) 104314.

[28] X. Zhang, D. Huang, H. Li, Y. Zhang, Y. Xia, J. Liu, Self-training maximum classifier discrepancy for eeg emotion recognition, CAAI Trans. Intell. Technol. (2023) 1–12.

[29] W. Liu, W.-L. Zheng, Z. Li, S.-Y. Wu, L. Gan, B.-L. Lu, Identifying similarities and differences in emotion recognition with EEG and eye movements among chinese, german, and french people, J. Neural Eng. 19 (2) (2022) 026012.

[30] X. Gong, Y. Dong, T. Zhang, CoDF-Net: coordinated-representation decision fusion network for emotion recognition with EEG and eye movement signals, Int. J. Mach. Learn. Cybern. (2023) 1–14.

[31] X. Gong, C.L.P. Chen, T. Zhang, Cross-cultural emotion recognition with EEG and Eye movement signals based on multiple stacked broad learning system, IEEE Trans. Comput. Soc. Syst. (2023) 1–12.

[32] J. Tang, Z. Ma, K. Gan, J. Zhang, Z. Yin, Hierarchical multimodal-fusion of physiological signals for emotion recognition with scenario adaption and contrastive alignment, Inf. Fusion 103 (2024) 102129.

[33] S. Ioffe, C. Szegedy, Batch normalization: Accelerating deep network training by reducing internal covariate shift, in: International Conference on International Conference on Machine Learning, ICML'15, JMLR.Org, 2015, pp. 448–456.

[34] D. Cer, Y. Yang, S.-y. Kong, N. Hua, N. Limtiaco, R.S. John, N. Constant, M. Guajardo-Cespedes, S. Yuan, C. Tar, et al., Universal sentence encoder for english, in: Proceedings of the 2018 Conference on Empirical Methods in Natural Language Processing: System Demonstrations, 2018, pp. 169–174.

[35] M. Long, H. Zhu, J. Wang, M.I. Jordan, Deep transfer learning with joint adaptation networks, in: International Conference on Machine Learning, PMLR, 2017, pp. 2208–2217.

[36] T. Kim, C. Kim, Attract, perturb, and explore: Learning a feature alignment network for semi-supervised domain adaptation, in: European Conference on Computer Vision, Springer, 2020, pp. 591–607.

[37] J.M. Joyce, Kullback–Leibler Divergence, Springer Berlin Heidelberg, Berlin, Heidelberg, 2011, pp. 720–722.

[38] J. Li, S. Qiu, Y.-Y. Shen, C.-L. Liu, H. He, Multisource transfer learning for cross-subject eeg emotion recognition, IEEE Trans. Cybern. 50 (7) (2020) 3281–3293.

[39] M. Zhu, Q. Wu, Z. Bai, Y. Song, Q. Gao, EEG-eye movement based subject dependence, cross-subject, and cross-session emotion recognition with multi-dimensional homogeneous encoding space alignment, Expert Syst. Appl. 251 (2024) 124001.

[40] J. Li, Y. Zhou, T. Liu, T.-P. Jung, X. Wan, D. Duan, D. Li, H. Yu, H. Song, X. Dong, D. Wen, A radial basis deformable residual convolutional neural model embedded with local multi-modal feature knowledge and its application in cross-subject classification, Expert Syst. Appl. 257 (2024) 125089.

[41] C. Yu, J. Wang, Y. Chen, M. Huang, Transfer learning with dynamic adversarial adaptation network, in: 2019 IEEE International Conference on Data Mining, ICDM, IEEE Computer Society, 2019, pp. 778–786.

[42] J.W. Foreman, Data Smart: Using Data Science To Transform Information Into Insight, John Wiley & Sons, 2013.

[43] L. Song, J. Huang, A. Smola, K. Fukumizu, Hilbert space embeddings of conditional distributions with applications to dynamical systems, in: Proceedings of the 26th Annual International Conference on Machine Learning, ICML '09, Association for Computing Machinery, New York, NY, USA, 2009, pp. 961–968.

[44] A. Gretton, K.M. Borgwardt, M.J. Rasch, B. Schölkopf, A. Smola, A kernel two-sample test, J. Mach. Learn. Res. 13 (1) (2012) 723–773.

[45] T. Miyato, S.-i. Maeda, M. Koyama, S. Ishii, Virtual adversarial training: a regularization method for supervised and semi-supervised learning, IEEE Trans. Pattern Anal. Mach. Intell. 41 (8) (2018) 1979–1993.

[46] A. Tarvainen, H. Valpola, Mean teachers are better role models: Weight-averaged consistency targets improve semi-supervised deep learning results, in: Advances in Neural Information Processing Systems, vol. 30, 2017, pp. 1195–1204.

[47] J. Li, F. Wang, H. Huang, F. Qi, J. Pan, A novel semi-supervised meta learning method for subject-transfer brain–computer interface, Neural Netw. 163 (2023) 195–204.

[48] W.-L. Zheng, B.-L. Lu, Investigating critical frequency bands and channels for eeg-based emotion recognition with deep neural networks, IEEE Trans. Auton. Ment. Dev. 7 (3) (2015) 162–175.

[49] G. Montavon, G.B. Orr, K. Müller (Eds.), Neural Networks: Tricks of the Trade, second ed., in: 7700 of Lecture Notes in Computer Science, Springer, 2012.

[50] J. Demšar, Statistical comparisons of classifiers over multiple data sets, J. Mach. Learn. Res. 7 (2006) 1–30.

[51] P. Zhong, D. Wang, C. Miao, Eeg-based emotion recognition using regularized graph neural networks, IEEE Trans. Affect. Comput. 13 (3) (2022) 1290–1301.